Village of Long Grove Illinois

STAFF REPORT

TO:	Long Grove PCZBA
FROM:	JAMES M. HOGUE, VILLAGE PLANNER
DATE:	2/20/14
RE:	PCZBA REQUEST #02-14; Consideration of a request for a Special Use Permit and/or additional relief necessary and/or appropriate under the zoning code to allow the continued operation and maintenance of an existing wireless communication antenna and related facilities and the co-location of additional antennas on the existing monopole telecommunications tower at 4210 Illinois Route 22 and zoned under the R-1 Zoning District Classification submitted by Amanda Roc on behalf of Crown-Castle International (Sprint Telecommunications).

Item: PCZBA Petition 02-14 submitted February 5, 2014. Referral by Village Board not required. Publication in newspaper completed 2/12/2014 and is therefore timely.

History: The property is zoned R-1 Residential District and contains a single family residence as well as an existing monopole cell tower facility with fifteen (15) antennas on three platforms and five (5) dishes attached to the tower. The property was force annexed into the Village in 2002. The existing monopole and antennas were on the property in question upon annexation and developed under the authority of Lake County. In 2009 the Village approved ordinance 2009-O-10 which allowed for the operation and maintenance of the tower as well as three additional antennas to be constructed at a height of 135' on the existing 165' foot tower constructed in the county.

Proposal: Consideration of a request by "Crown Castle Corporation" (Sprint Telecom) for a special use permit to allow continued operation and maintenance of the existing monopole, antennas and related facilities and co-location of additional antennas on an existing monopole telecommunications tower and a 3.25' x 2.5' equipment cabinet improvement. Petitioner wishes to add three new antennas (to the three existing antennas) on an existing antenna platform at a height of 149 feet on the existing 165 foot monopole.

Land Use, Zoning and Locational Data:

1. Proposed Zoning: No zoning change requested; amendment of the existing SUP is requested. Ordinance 2009-O-10 did allow for the continued operation and maintenance of the existing tower, antenna and facilities and the co-location of additional antennas and related equipment facilities on the existing monopole and site within the Village.

2. Surrounding Land Uses and Zoning;

Direction	*Existing Use*	*Land Use Plan Designation/Zoning*
NORTH	Residential	Residential; R-2 PUD White Oaks
SOUTH	Residential	Residential; R-3 PUD The Orchards
EAST	Residential	Residential; R-1 & R2 PUD Shaheen's & White Oaks PUD's
WEST	Vacant/Agricultural	Part of the Route 22/Old McHenry Road Sub-Area; R-1

3. Location; The property is located on the north side of Route 22. The existing cell tower and accessory equipment storage structures are located north of the existing residence in the southern third of the property. The existing tower, antennas and related facilities are more or less centered on the property.
4. Acreage; The 4210 property contains 4.0 +/- acres of land area. The existing cell tower & equipment facilities occupy approximately 40' x 30' (1200 +/- sq. ft.) of the four acre piece.
5. Based upon information available through Lake County GIS, the property contains FEMA Floodplain, Flood of Record area and/or wetlands (LCWI & ADID). However these are confined to the northern third of the property. The existing tower and related facilities are approximately 300 feet from the edge of the floodplain and wetlands on the property. (See Maps).
6. Topography; See attached Map from Lake County GIS.

Zoning Data	Existing	Proposed	Zoning Code	PUD
Lot Area	**174,240 sq. ft.**	**174,240 sq. ft.**	**3 acres (130,680 sq. ft.)**	**N/A**
Floor Area (Total Floor Area)	**N/A***	**N/A**	**N/A**	**N/A**
Lot Coverage (In Square Feet)	**UNKNOWN**	**8 sq. ft.****	**40% (69,700 sq. ft.)**	**N/A**
Height	**165'**	**165'**	**125'*****	**N/A**

NOTES :

* Applies to principal residential structure only.

** 8 sq. ft. Equipment cabinet proposed @ 6.5 feet tall - Maximum permitted under Wireless Services Antenna Regulations is 150 sq. ft. / 15 feet.

*** Maximum Height for tower unless otherwise authorized by SUP

Yard Requirements (set-backs);

	Existing*	Proposed**	Zoning*** Ordinance (R-1 Standards)	P.U.D.
Front Yard (South)	**390'**	**390'**	**100'**	**N/A**
Side Yard (West)	**30'**	**30'**	**50'**	**N/A**
Side Yard (East)	**62'**	**62'**	**50'**	**N/A**
Rear Yard (North)	**820'**	**810'**	**50'**	**N/A**

NOTES:

* Approximate measurement; scaled to 40'x 30' tower & equipment area.

** Scaled to equipment shed.

*** For Principal Structures in R-1 District; Cell towers regulated via 5-9-6 of Village Zoning Code

Analysis & Conclusions:

The existing monopole and cellular antennas were permitted and built under the authority of Lake County. In 2002 the property upon which the tower and antennas are located was force annexed into the Village. As no special use permit was ever issued by the Village for the tower as mandated by 5-9-6 of the Village Code, ordinance 2009-O-10 allowed for the operation and maintenance of the tower as well as three additional antennas to be constructed on the existing tower. This ordinance essentially brought the tower in the village jurisdiction and allowed for continued operation and maintenance of the tower & related equipment.

The existing monopole structure is 165 feet in height (including antennas). Per Village Code height is limited to 125 feet. Per the site plan submitted by the petitioner, antennas would be added to the existing platform at a height of 149' feet. No additional antenna platform or increase in antenna height is being requested from what currently exists (see Feb 19, 2014 photo). Although technically not in compliance with Village Code with regard to height, no increase in antenna height is being requested over what exists currently. The PCZBA should consider the height question in light of the established co-location policy also adopted by the Village and determine which is more beneficial to the Village in this instance.

The petitioner has submitted a report from B+T Group structural engineers (dated 12.16.2013) which indicates the existing monopole structure has "sufficient capacity" for the existing and proposed loading and that no modifications to the monopole are required at this time (report attached).

The equipment cabinet is proposed to be installed on an existing platform within the fenced area of the "compound" on site. No expansion of the compound area is requested or proposed.

There is extensive vacant property to the north and setbacks or encroachment into a floodplain or wetland should not be an issue with the request. Lot coverage, should not be an issue as well as it does not appear the 40% lot coverage threshold has been reached and increase in lot coverage is very minimal. On this property approximately 69,700 square feet of land area (1.6 acres) could be covered to achieve the 40% maximum lot coverage figure. The vast majority of the property remains vacant with most development occurring in the southern third of the property.

Additionally the proposal is in conformance with the Village policy of co-location of personal wireless service antennae as follows;

Location. Personal wireless services antennae shall be mounted on existing antenna support structures or other lawfully existing buildings, unless otherwise provided in this ordinance. No more than one antenna support structure shall be permitted on any one zoning lot.

Co-Location. Unless otherwise authorized by the Village for good cause shown, every newly constructed personal wireless services antenna support structure shall be designed, constructed and installed to be of a sufficient size and capacity to allow the commercially feasible location of antennae for additional personal wireless service providers on such structure in the future

Respectfully Submitted,

James M. Hogue
Village Planner

Lake County, Illinois

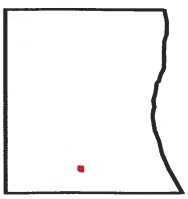

LakeCounty
Geographic Information System

Lake County Department
of Information Technology
18 N County St
Waukegan IL 60085
(847) 377-2373

Map Printed on 02/20/2014

N

- Forest Preserves
- Lake County Border
- Streams
- Tax Parcels
- Trails
- 2011 Buildings

Disclaimer The selected soil feature layer may not occur anywhere in the current map extent. A Registered Land Surveyor should be consulted to determine the precise location of property boundaries on the ground. This map does not constitute a regulatory determination and is not a base for engineering design. This map is intended to be viewed and printed in color.

Lake County, Illinois

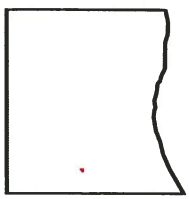

LakeCounty
Geographic Information System

Lake County Department
of Information Technology
18 N County St
Waukegan IL 60085
(847) 377-2373

Map Printed on 02/20/2014

N

- Forest Preserves
- Lake County Border
- Streams
- Tax Parcels
- Trails
- 2011 Buildings

Disclaimer The selected soil feature layer may not occur anywhere in the current map extent. A Registered Land Surveyor should be consulted to determine the precise location of property boundaries on the ground. This map does not constitute a regulatory determination and is not a base for engineering design. This map is intended to be viewed and printed in color.

Lake County, Illinois

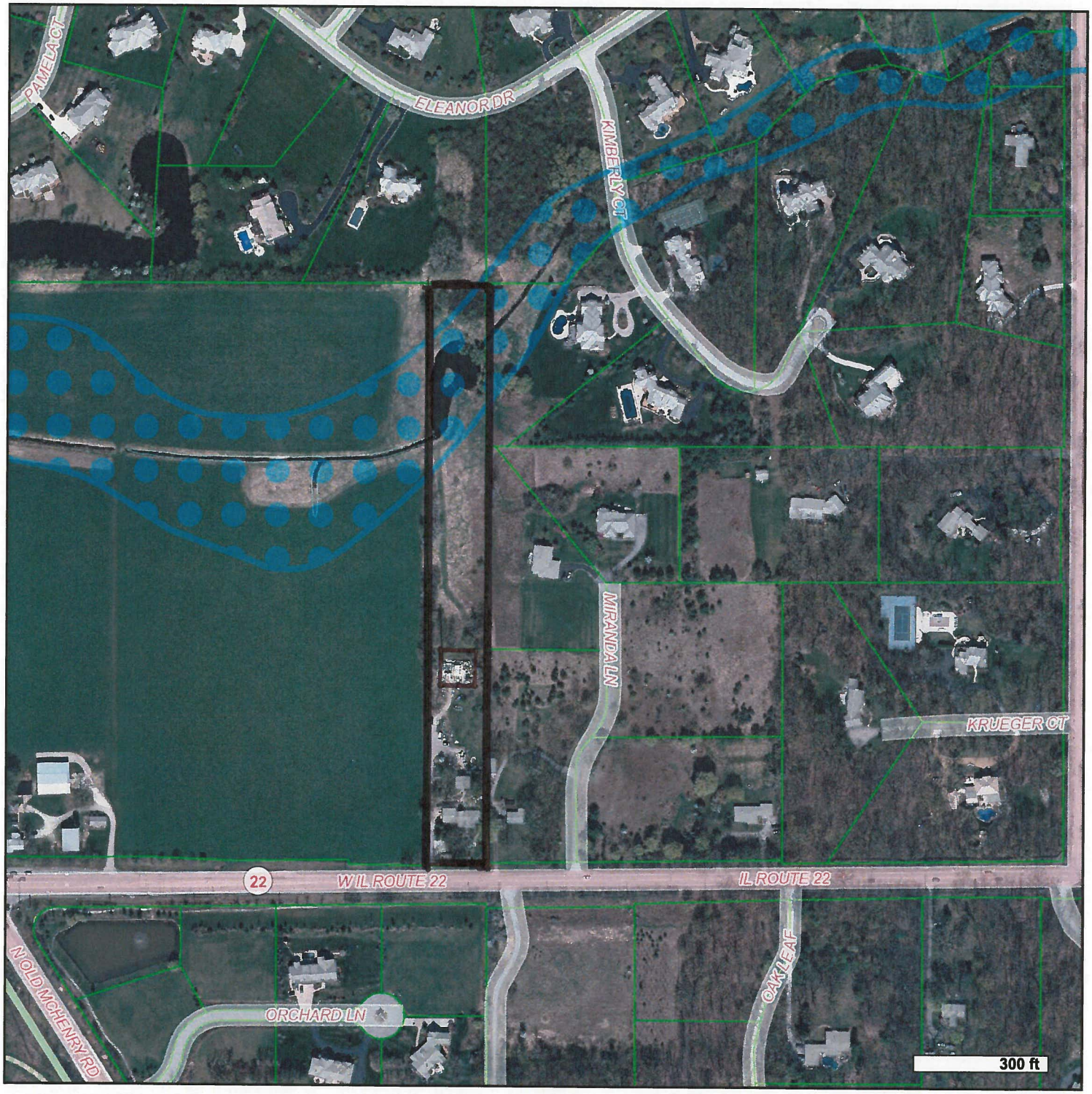

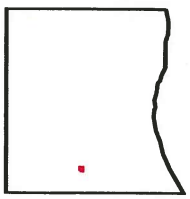

LakeCounty
Geographic Information System

Lake County Department
of Information Technology
18 N County St
Waukegan IL 60085
(847) 377-2373

Map Printed on 02/20/2014

N

- Forest Preserves
- Lake County Border
- Streams
- Tax Parcels
- Trails
- Special Flood Hazard Areas
- 2011 Buildings
- General Structures
- FEMA Base Flood Elevation
- Floodway Areas In Zone AE
- Other Flood Areas

Disclaimer The selected soil feature layer may not occur anywhere in the current map extent. A Registered Land Surveyor should be consulted to determine the precise location of property boundaries on the ground. This map does not constitute a regulatory determination and is not a base for engineering design. This map is intended to be viewed and printed in color.

Lake County, Illinois

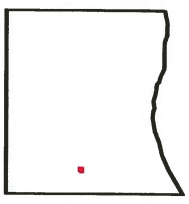

LakeCounty
Geographic Information System

Lake County Department
of Information Technology
18 N County St
Waukegan IL 60085
(847) 377-2373

Map Printed on 02/20/2014

N

- Forest Preserves
- Lake County Border
- Wetlands
- Streams
- Tax Parcels
- Trails
- ADID with 100ft Buffer
- ADID Boundary
- 2011 Buildings

Disclaimer The selected soil feature layer may not occur anywhere in the current map extent. A Registered Land Surveyor should be consulted to determine the precise location of property boundaries on the ground. This map does not constitute a regulatory determination and is not a base for engineering design. This map is intended to be viewed and printed in color.

Lake County, Illinois

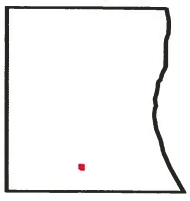

LakeCounty
Geographic Information System

Lake County Department
of Information Technology
18 N County St
Waukegan IL 60085
(847) 377-2373

Map Printed on 02/20/2014

N

- Forest Preserves
- Lake County Border
- Streams
- Tax Parcels
- Trails
- 2011 Buildings
- Major Contour Line
- Minor Contour Line

Disclaimer The selected soil feature layer may not occur anywhere in the current map extent. A Registered Land Surveyor should be consulted to determine the precise location of property boundaries on the ground. This map does not constitute a regulatory determination and is not a base for engineering design. This map is intended to be viewed and printed in color.

FEB 19 2014

December 16, 2013

Patrick Byrum
Crown Castle
3530 Toringdon Way Suite 300
Charlotte, NC 28277
(704) 405-6532

B+T Group
1717 S. Boulder, Suite 300
Tulsa, OK 74119
(918) 587-4630
btwo@btgrp.com

Subject: **Structural Analysis Report**

Carrier Designation:

***Sprint PCS* Co-Locate- Scenario A**
Carrier Site Number: CH03XC407
Carrier Site Name: BOHAC

Crown Castle Designation:

Crown Castle BU Number: 875565
Crown Castle Site Name: BOHAC
Crown Castle JDE Job Number: 252303
Crown Castle Work Order Number: 685209
Crown Castle Application Number: 206516 Rev. 1

Engineering Firm Designation:

B+T Group Project Number: 83230.002.01

Site Data:

19520 WEST HIGHWAY 22, LAKE ZURICH, Lake County, IL
Latitude *42° 11' 54.48"*, Longitude *-88° 0' 52.05"*
165 Foot - Monopole Tower

Dear Patrick Byrum,

B+T Group is pleased to submit this **"Structural Analysis Report"** to determine the structural integrity of the above mentioned tower. This analysis has been performed in accordance with the Crown Castle Structural 'Statement of Work' and the terms of Crown Castle Purchase Order Number 600808, in accordance with application 206516, revision 1.

The purpose of the analysis is to determine acceptability of the tower stress level. Based on our analysis we have determined the tower stress level for the structure and foundation, under the following load case, to be:

LC5: Existing + Proposed Equipment **Sufficient Capacity**
Note: See Table 1 and Table 2 for the proposed and existing loading, respectively.

The analysis has been performed in accordance with the TIA-222-G standard and IBC 2009 based upon a wind speed of 89 mph 3-second gust, exposure category C with topographic category 1 and crest height of 0 feet.

All equipment proposed in this report shall be installed in accordance with the attached drawings for the determined available structural capacity to be effective.

We at *B+T Group* appreciate the opportunity of providing our continuing professional services to you and Crown Castle. If you have any questions or need further assistance on this or any other projects please give us a call.

Respectfully submitted by:
B+T Engineering, Inc.

Kishore Machani
Project Engineer

John W. Kelly, P.E., S.E.
Vice President

tnxTower Report - version 6.1.3.1

TABLE OF CONTENTS

1) INTRODUCTION

2) ANALYSIS CRITERIA
Table 1 - Proposed Antenna and Cable Information
Table 2 - Existing Antenna and Cable Information
Table 3 - Design Antenna and Cable Information

3) ANALYSIS PROCEDURE
Table 4 - Documents Provided
3.1) Analysis Method
3.2) Assumptions

4) ANALYSIS RESULTS
Table 5 - Section Capacity (Summary)
Table 6 – Tower Components vs. Capacity
4.1) Recommendations

5) APPENDIX A
tnxTower Output

6) APPENDIX B
Base Level Drawing

7) APPENDIX C
Additional Calculations

1) INTRODUCTION

This tower is a 165 ft Monopole tower designed by VALMONT in May of 1998. The tower was originally designed for a wind speed of 85 mph per TIA/EIA-222-F.

2) ANALYSIS CRITERIA

The structural analysis was performed for this tower in accordance with the requirements of TIA-222-G Structural Standards for Steel Antenna Towers and Antenna Supporting Structures using a 3-second gust wind speed of 89 mph with no ice, 40 mph with 0.75 inch ice thickness and 60 mph under service loads, exposure category C with topographic category 1 and crest height of 0 feet.

Table 1 - Proposed Antenna and Cable Information

Mounting Level (ft)	Center Line Elevation (ft)	Number of Antennas	Antenna Manufacturer	Antenna Model	Number of Feed Lines	Feed Line Size (in)	Note
145.0	148.0	3	Kmw Communications	ET-X-WM-18-65-8P	--	--	--
		3	Samsung Telecommunications	2.5GHz RRH-V3			
		3	Samsung Telecommunications	OPTIC FIBER JUNCTION CYLINDER			
		3	Samsung Telecommunications	POWER JUNCTION CYLINDER			

Table 2 - Existing Antenna and Cable Information

Mounting Level (ft)	Center Line Elevation (ft)	Number of Antennas	Antenna Manufacturer	Antenna Model	Number of Feed Lines	Feed Line Size (in)	Note
155.0	161.0	1	Andrew	VHLP1-23	9 6 2 4	1 5/8 1 5/8 5/16 1/2	1
		1	Andrew	VHLP2-11			
		2	Andrew	VHLP800-11			
	157.0	6	Ems Wireless	RR90-11-00DBL			
		3	Kmw Communications	HB-X-WM-17-65-00T			
		3	Kmw Communications	KMDAPS2050000			
	155.0	1	Tower Mounts	Platform Mount (LP 405-1)			
145.0	148.0	3	Kmw Communications	ET-X-TS-70-15-62-18-iR-RC	6	1 5/8	1
	145.0	3	Samsung Telecommunication	800MHz EXT. FILTER			
		3	Samsung Telecommunication	RRH-C2 w/EXT FILTER			
		3	Samsung Telecommunication	RRH-P4 Ph1			
		1	Tower Mounts	Platform Mount [LP 601-1]			
133.0	135.0	3	kmw communications	HB-X-AW-19-65-00T	6	1 5/8	1

Mounting Level (ft)	Center Line Elevation (ft)	Number of Antennas	Antenna Manufacturer	Antenna Model	Number of Feed Lines	Feed Line Size (in)	Note
	133.0	1	tower mounts	T-Arm Mount [TA 602-3]			
98.0	100.0	1	Andrew	VHLP2-11	2	1/2	1
		1	Andrew	VHLP2-180	2	3/8	
	98.0	1	nec corporation	NLITE 11G 155			
		1	nec corporation	NLITE 18G 155			
		2	tower mounts	Pipe Mount [PM 601-1]			

Notes:
1) Existing Equipment

Table 3 - Design Antenna and Cable Information

Mounting Level (ft)	Center Line Elevation (ft)	Number of Antennas	Antenna Manufacturer	Antenna Model	Number of Feed Lines	Feed Line Size (in)
162	162	1	--	Cellular Platform	--	--
		12	Swedcom	ALP9212-N		
155	155	1	--	Cellular Platform	--	--
		12	Swedcom	ALP9212-N		
145	145	1	--	Cellular Platform	--	--
		12	Swedcom	ALP9212-N		
135	135	1	--	Cellular Platform	--	--
		12	Swedcom	ALP9212-N		

3) ANALYSIS PROCEDURE

Table 4 - Documents Provided

Document	Remarks	Reference	Source
Online Application	Sprint Co-Locate Revision #1	206516	CCI Sites
Tower Manufacturer Drawings	Valmont, Order No. 17226-98	1918305	CCI Sites
Foundation Drawings	Valmont, Job No. 17226-98	1436396	CCI Sites
Geotech Report	ETS, Project No. C4145	1521030	CCI Sites
Antenna Configuration	Crown CAD Package	Date: 12/09/2013	CCI Sites

3.1) Analysis Method

tnxTower (version 6.1.3.1), a commercially available analysis software package, was used to create a three-dimensional model of the tower and calculate member stresses for various loading cases. Selected output from the analysis is included in Appendix A.

3.2) Assumptions

1) Tower and structures were built in accordance with the manufacturer's specifications.
2) The tower and structures have been maintained in accordance with the manufacturer's specification.
3) The configuration of antennas, transmission cables, mounts and other appurtenances are as specified in Tables 1 and 2 and the referenced drawings.
4) Mount areas and weights are assumed based on photographs provided.

This analysis may be affected if any assumptions are not valid or have been made in error. B+T Group should be notified to determine the effect on the structural integrity of the tower.

4) ANALYSIS RESULTS

Table 5 - Section Capacity (Summary)

Section No.	Elevation (ft)	Component Type	Size	Critical Element	P (K)	SF*P_allow (K)	% Capacity	Pass / Fail
L1	165 - 119.33	Pole	TP30.85x19.88x0.25	1	-10.576	1556.500	36.5	Pass
L2	119.33 - 78.25	Pole	TP40.2x29.228x0.375	2	-19.590	3232.970	40.7	Pass
L3	78.25 - 38.17	Pole	TP49.07x38.071x0.438	3	-32.050	4525.170	44.6	Pass
L4	38.17 - 0	Pole	TP57.35x46.556x0.5	4	-51.451	6104.990	45.9	Pass
							Summary	
						Pole (L4)	45.9	Pass
						RATING =	45.9	Pass

Table 6 - Tower Component Stresses vs. Capacity – LC5

Notes	Component	Elevation (ft)	% Capacity	Pass / Fail
1	Anchor Rods	Base	58.4	Pass
1	Base Plate	Base	33.6	Pass
1	Base Foundation	Base	34.9	Pass

Structure Rating (max from all components) =	58.4%

Notes:
1) See additional documentation in "Appendix C – Additional Calculations" for calculations supporting the % capacity consumed.
2) Capacities up to 105% are considered acceptable based on analysis methods used.

4.1) Recommendations

The tower and its foundation have sufficient capacity to carry the existing and proposed loads. No modifications are required at this time.

APPENDIX A

TNXTOWER OUTPUT

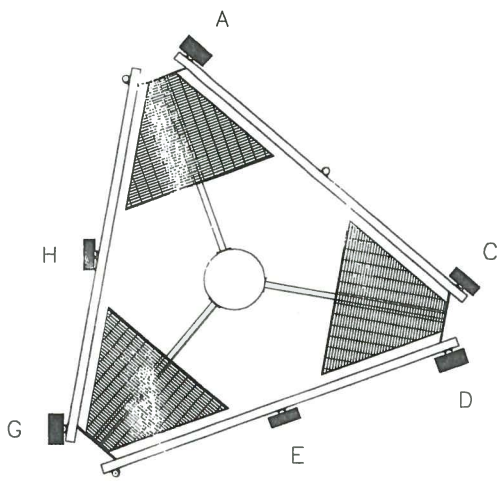

			ANTENNA							FEEDLINE		TME			
ORIENT		CUSTOMER	℄	STATUS	MFG	MODEL	AZ	TECH	TX/RX	QTY	SIZE	QTY	TME TYPE	MFG	MODEL
A	MID	SPRINT PCS	148	INSTALLED	KMW COMM.	ET-X-TS-70-15-62-18-R-RC	40	LTE	TX/RX	1	1 1/2"	1	BASESTN	SAMSUNG TELECOM	800MHz EXT. FILTER
		SPRINT PCS		INSTALLED						0		1	BASESTN	SAMSUNG TELECOM	RRH-P4 Ph1
		SPRINT PCS		INSTALLED						0		1	BASESTN	SAMSUNG TELECOM	RRH-C2 w/EXT FILTER
B															
C	MID	SPRINT PCS	148	PROPOSED	KMW COMM.	ET-X-WM-18-65-8P	40	LTE	TX/RX	0		1	SPLTTR	SAMSUNG TELECOM	PWR JNCTN CYL
		SPRINT PCS		PROPOSED						0		1	BASESTN	SAMSUNG TELECOM	2.5GHz RRH-V3
		SPRINT PCS		PROPOSED						0		1	SPLTTR	SAMSUNG TELECOM	OPTIC FBR JNCTN CYL
D	MID	SPRINT PCS	148	INSTALLED	KMW COMM.	ET-X-TS-70-15-62-18-R-RC	160	LTE	TX/RX	1	1 1/2"	1	BASESTN	SAMSUNG TELECOM	RRH-P4 Ph1
		SPRINT PCS		INSTALLED						0		1	BASESTN	SAMSUNG TELECOM	800MHz EXT. FILTER
		SPRINT PCS		INSTALLED						0		1	BASESTN	SAMSUNG TELECOM	RRH-C2 w/EXT FILTER
E	MID	SPRINT PCS	148	PROPOSED	KMW COMM.	ET-X-WM-18-65-8P	160	LTE	TX/RX	0		1	SPLTTR	SAMSUNG TELECOM	OPTIC FBR JNCTN CYL
		SPRINT PCS		PROPOSED						0		1	BASESTN	SAMSUNG TELECOM	2.5GHz RRH-V3
		SPRINT PCS		PROPOSED						0		1	SPLTTR	SAMSUNG TELECOM	PWR JNCTN CYL
F															
G	MID	SPRINT PCS	148	INSTALLED	KMW COMM.	ET-X-TS-70-15-62-18-R-RC	270	LTE	TX/RX	1	1 1/2"	1	BASESTN	SAMSUNG TELECOM	RRH-C2 w/EXT FILTER
		SPRINT PCS		INSTALLED						0		1	BASESTN	SAMSUNG TELECOM	RRH-P4 Ph1
		SPRINT PCS		INSTALLED						0		1	BASESTN	SAMSUNG TELECOM	800MHz EXT. FILTER
H	MID	SPRINT PCS	148	PROPOSED	KMW COMM.	ET-X-WM-18-65-8P	270	LTE	TX/RX	0		1	SPLTTR	SAMSUNG TELECOM	PWR JNCTN CYL
		SPRINT PCS		PROPOSED						0		1	SPLTTR	SAMSUNG TELECOM	OPTIC FBR JNCTN CYL
		SPRINT PCS		PROPOSED						0		1	BASESTN	SAMSUNG TELECOM	2.5GHz RRH-V3
I															
J															
K															
L															
M															
N															
O															
P															
Q															
R															

OPERATING LEGAL ENTITY: ***SPRINTCOM, INC.***

BUSINESS UNIT: 875565 TOWER ID: A LEVEL: 145

LEVEL DRAWING

PLOT DATE 12/9/2013 FILE NAME 875565_A_145_P.dwg (LP 3.2-1)

ENG-PLN-10050 REV(-) DATE:7/13/06 APP ID: 206516 REV:

CROWN CASTLE

CROWN REGION ADDRESS

USA

SPACE RESERVED FOR PROFESSIONAL SEALS

REVISIONS			
NO.	DATE	DESCRIPTION	BY
1	9/12/2013	UPDATED PER WORK ORDER 685207	KAH

DRAWN/CHECKED BY: EZCAD
DRAWING DATE: 12/9/2013

SITE NUMBER:
SITE NAME:

SITE NAME

BOHAC

BUSINESS UNIT NUMBER

875565

SITE ADDRESS

19520 WEST HIGHWAY 22
LAKE ZURICH, IL 60047
LAKE COUNTY
US

SHEET TITLE

145 FT PROPOSED LEVEL

SHEET NUMBER

A1-X

ENG-PLN-10000 REV(-) DATE:/13/08

PLOT DATE: FILE NAME:

875565_TW_A.DWG

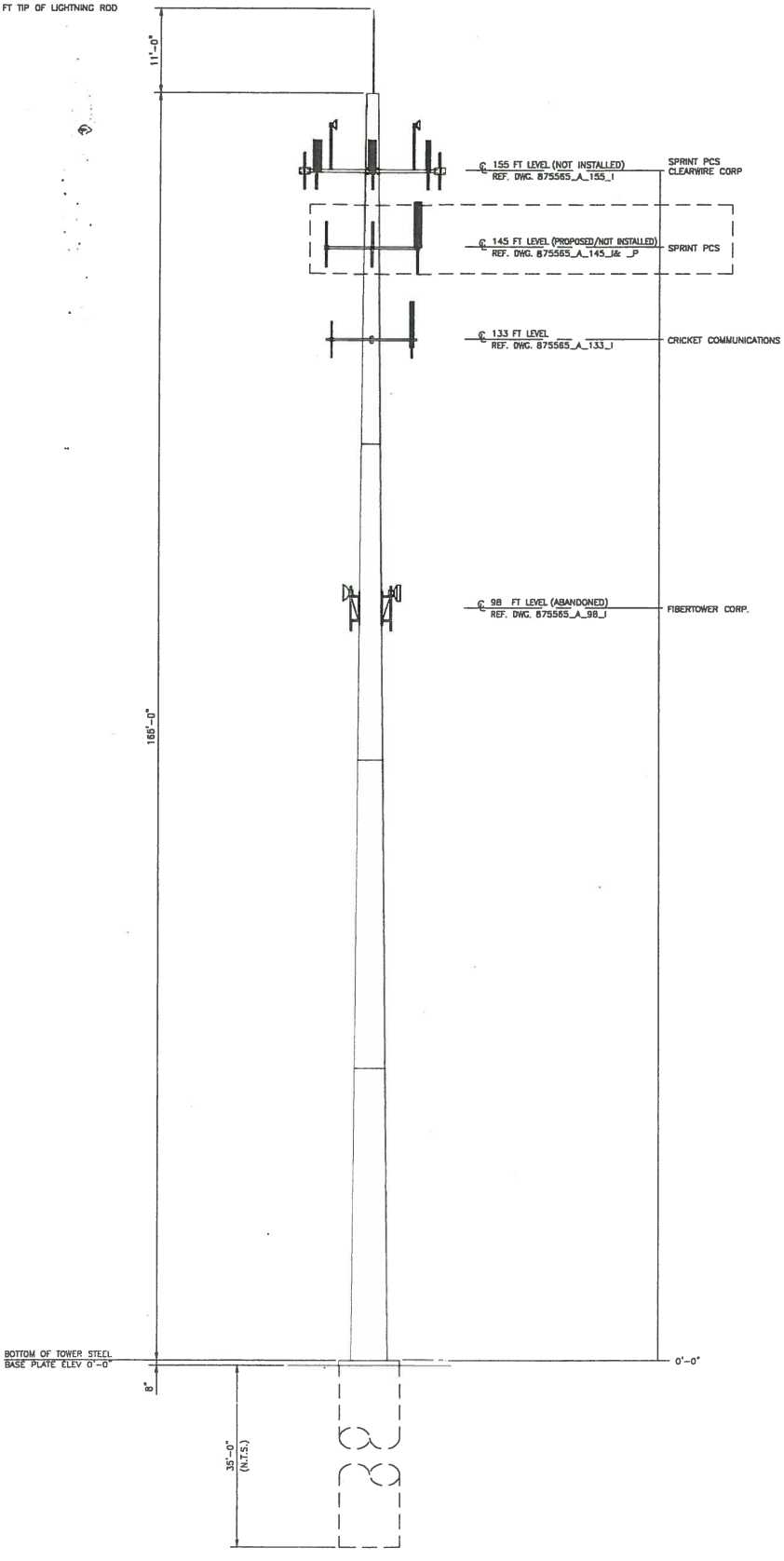

TOWER INFORMATION
VALMONT
165 FT MONOPOLE TOWER
4 FT 9 IN BASE WIDTH
1 FT 8 IN TOP WIDTH

BUSINESS UNIT: 875565 TOWER ID: A

ELEVATION

SCALE: 1" = 15'-0" | 1

A-1

SHEET NUMBER | SHEET TITLE | SITE ADDRESS | SITE NUMBER

BBF
29/08/07

REVISIONS			
NO.	DATE	DESCRIPTION	BY
9	24/08/09	AS-BUILT INFORMATION ADDED PER WORK ORDER # 287326	SAC
10	29/04/10	AS-BUILT INFORMATION ADDED PER WORK ORDER # 333229	AM
11	03/05/10	APPLICATION ADDED PER WORK ORDER # 333673	CCH
12	11/11/10	AS-BUILT INFORMATION ADDED PER WORK ORDER # 384062	SV
13	07/07/11	APPLICATION ADDED PER WORK ORDER # 421937	VP
14	22/2/2013	UPDATED PER WORK ORDER 540161	ACM
15	29/7/2013	UPDATED PER WORK ORDER 627833	AMC
16	1/10/2013	UPDATED PER WORK ORDER 651380	JM
17	9/12/2013	UPDATED PER WORK ORDER 685207	KAH

CROWN CASTLE

USA

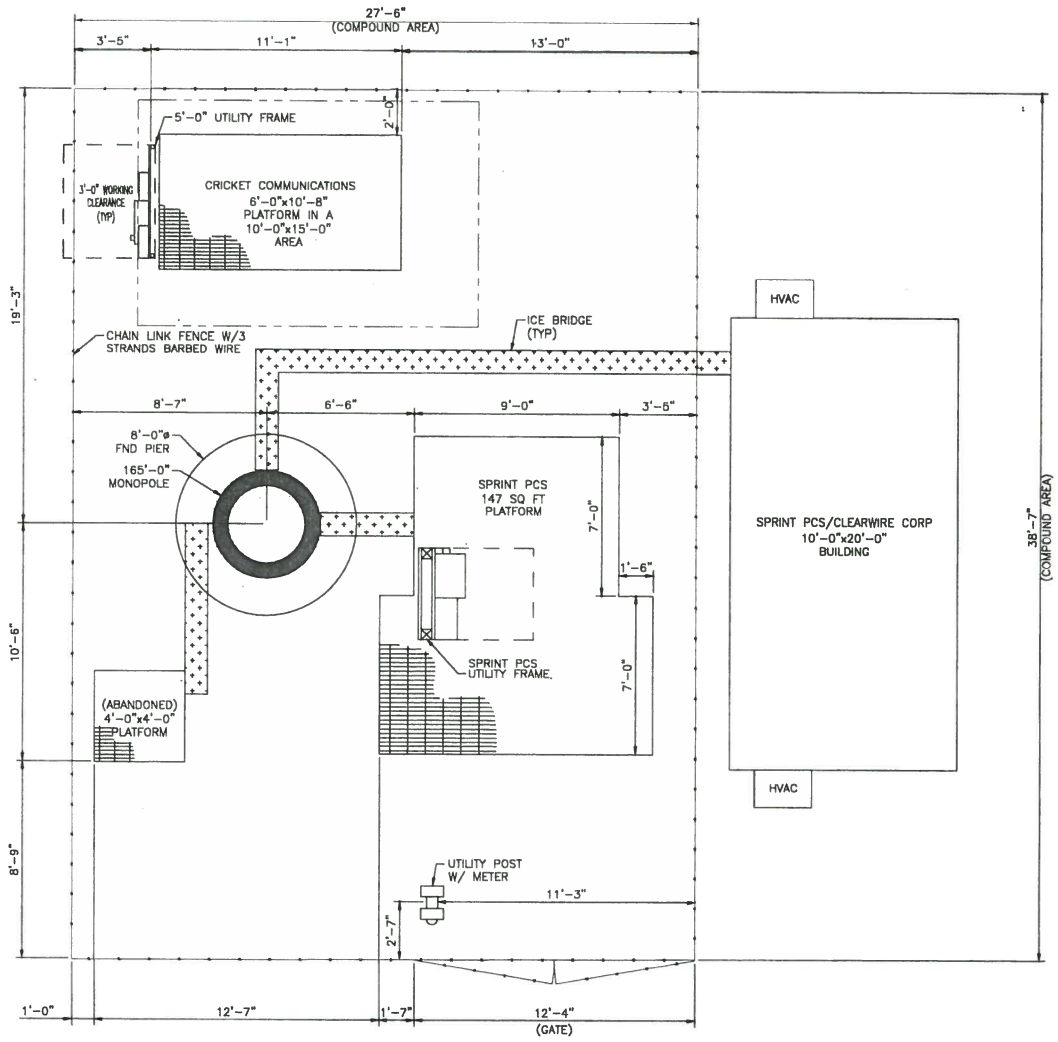

AREA USAGE	
CROWN LEASE AREA	0 SQ FT
COMPOUND AREA	1058 SQ FT

SITE PLAN

PLOT DATE 12/9/2013 FILE NAME 875[illegible]_SITEPLAN.DWG

ENG-PLN-10050 REV(-) DATE:7/13/06

CROWN CASTLE

CROWN REGION ADDRESS
USA

SPACE RESERVED FOR PROFESSIONAL SEALS

REVISIONS			
NO.	DATE	DESCRIPTION	BY
A	29/08/07	NEW BUILD PER WORK ORDER # 135804	BBF
B	03/11/08	APPLICATION ADDED PER WORK ORDER # 238971	MDS
C	24/03/09	UPDATED PER WORK ORDER # 262104	CDH
D	10/04/09	UPDATED PER WORK ORDER # 266143	AST
E	21/09/09	AS-BUILT INFORMATION ADDED PER WORK ORDER # 267241	SAC
F	11/11/10	AS-BUILT INFORMATION ADDED PER WORK ORDER # 304865	SM
G	27/06/12	AS-BUILT INFORMATION ADDED PER WORK ORDER # 343818	MC
H	22/02/13	UPDATED PER WORK ORDER # 380161	ADJ
J	29/07/13	AS-BUILT INFORMATION ADDED PER WORK ORDER # 377533	MMC

DRAWN BY: BBF
CHECKED BY:
DRAWING DATE: 29/08/07

SITE NUMBER:
SITE NAME:

SITE NAME
BOHAC

BUSINESS UNIT NUMBER
875565

SITE ADDRESS
19520 WEST HIGHWAY
LAKE ZURICH, IL 60047
LAKE COUNTY
USA

SHEET TITLE
SITE PLAN

SHEET NUMBER
A-2

SCALE: 1/4" = 1'-0"

1

Sprint

PROJECT:	2.5 EQUIPMENT DEPLOYMENT
SITE NAME:	BOHAC
SITE CASCADE:	CH01XC407 - C
SITE NUMBER:	875565
SITE ADDRESS:	19520 WEST HIGHWAY 22 LAKE ZURICH, IL 60047
SITE TYPE:	EXISTING 165'-0" MONOPOLE

2.5GHz EXISTING 165'-0" MONOPOLE

SITE INFORMATION

PROPERTY OWNER:
CROWN CASTLE
2000 CORPORATE DRIVE
CANONSBURG, PA 15317

BU# 875565

LATITUDE (NAD83):
42° 11' 54.48" N
42.198467°

LONGITUDE (NAD83):
88° 0' 52.05" W
-88.014458°

COUNTY:
LAKE

ZONING JURISDICTION:
THE VILLAGE OF LONG GROVE

ZONING DISTRICT:
R2

POWER COMPANY:
COMMONWEALTH EDISON

AAV PROVIDER:
ATT

SPRINT CM:
SEAN McGORMAN
sean.mcgorman@sprint.com

EQUIPMENT SUPPLIER:
SAMSUNG

AREA MAP

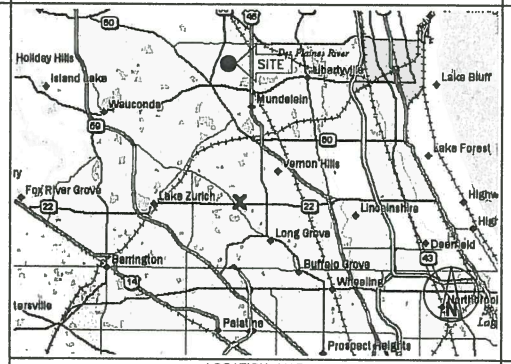

LOCATION MAP

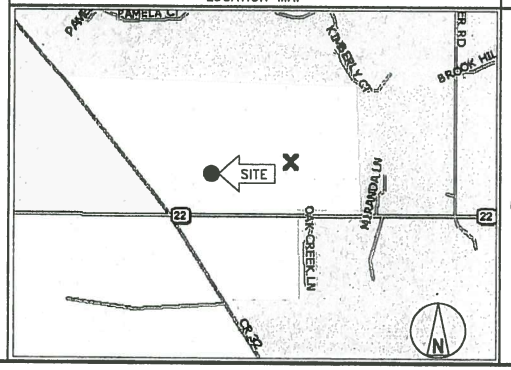

PROJECT DESCRIPTION

- INSTALL (1) SAMSUNG GROWTH CABINET IN EXISTING LEASE SPACE
- INSTALL (8) SAMSUNG BATTERIES
- INSTALL (3) PANEL ANTENNAS
- NSTALL (3) RRU'S TO TOWER
- NSTALL (27) COAX JUMPERS
- INSTALL (3) AISG CABLES
- INSTALL (1) HYBRID CABLES

APPLICABLE CODES

ALL WORK SHALL BE PERFORMED AND MATERIALS INSTALL IN ACCORDANCE WITH THE CURRENT EDITIONS OF THE FOLLOWING CODES AS ADOPTED BY THE LOCAL GOVERNING AUTHORITIES. NOTHING IN THESE PLANS IS TO BE CONSTRUED TO PERMIT WORK NOT CONFORMING TO THESE CODES.

1. 2009 INTERNATIONAL BUILDING CODE
2. 2009 INTERNATIONAL MECHANICAL CODE
3. ANSI/TIA-222 STRUCTURAL STANDARD
4. NFPA 780 – LIGHTNING PROTECTION CODE
5. ILLINOIS STATE PLUMBING CODE (CURRENT ISSUE) WITH LOCAL AMENDMENTS
6. 2011 NEC NATIONAL ELECTRICAL CODE

IN THE EVENT OF CONFLICT, THE MOST RESTRICTIVE CODE SHALL PREVAIL

811 Know what's below. Call before you dig. www.call811.com

DRAWING INDEX

SHEET NO:	SHEET TITLE	REV	ENGINEER
T-1	TITLE SHEET & PROJECT DATA	0	MS
SP-1	OUTLINE SPECIFICATIONS	0	MS
SP-2	OUTLINE SPECIFICATIONS	0	MS
A-1	SITE PLAN	0	MS
A-2	TOWER ELEVATION & CABLE PLAN	0	MS
A-3	ANTENNA LAYOUT & MOUNTING DETAILS	0	MS
A-4	EQUIPMENT DETAILS	0	MS
A-5	EQUIPMENT DETAILS	0	MS
E-1	GROUNDING & ELECTRICAL PLAN	0	MS
E-2	GROUNDING DETAILS	0	MS
E-3	DC POWER & DISTRIBUTION	0	MS
E-4	A/C POWER DISTRIBUTION	0	MS
S-1	STRUCTURAL DETAILS	0	MS

PLANS PREPARED FOR:
Sprint
6580 Sprint Parkway
Overland Park, Kansas 66251

PLANS PREPARED BY:
KCS CORPORATION
CONSULTING ENGINEERS
1123 REMINGTON RD., SCHAUMBURG, IL 60173
PHONE: 847-490-8200; FAX: 847-490-8225
www.kcscorp.com

OEM:

MLA PARTNER:
CROWN CASTLE
20 N. MARTINGALE RD. SUITE 440
SCHAUMBURG, IL 60173

ENGINEERING LICENSE:
SIDDIKSH M. SETHI 0062-051290 LICENSED PROFESSIONAL ENGINEER STATE OF ILLINOIS
SIGNATURE:
DATE: 01/10/14 EXPIRES: 11/30/15

DRAWING NOTICE:
THESE DOCUMENTS ARE CONFIDENTIAL AND ARE THE SOLE PROPERTY OF SPRINT AND MAY NOT BE REPRODUCED, DISSEMINATED OR REDISTRIBUTED WITHOUT THE EXPRESS WRITTEN CONSENT OF SPRINT

REVISIONS:

DESCRIPTION	DATE	BY	REV
2.5 FOR REVIEW	12/13/13	MS	A
2.5 REVISED PER SPRINT COMMENTS	12/24/13	MS	B
2.5 ISSUED FOR CONSTRUCTION	01/10/14	MS	0

SITE NAME:
BOHAC

SITE CASCADE:
CH03XC407

SITE ADDRESS:
19520 WEST HIGHWAY 22
LAKE ZURICH, IL
60047

SHEET DESCRIPTION:
TITLE SHEET

SHEET NUMBER:
T-1

THESE OUTLINE SPECIFICATIONS IN CONJUNCTION WITH THE SPRINT STANDARD CONSTRUCTION SPECIFICATIONS, INCLUDING CONTRACT DOCUMENTS AND THE CONSTRUCTION DRAWINGS DESCRIBE THE WORK TO BE PERFORMED BY THE CONTRACTOR.

SECTION 01 100 – SCOPE OF WORK

THE WORK:
SHALL COMPLY WITH APPLICABLE NATIONAL CODES AND STANDARDS, LATEST EDITION, AND PORTIONS THEREOF.

PRECEDENCE:
SHOULD CONFLICTS OCCUR BETWEEN THE STANDARD CONSTRUCTION SPECIFICATIONS FOR WIRELESS SITES INCLUDING THE STANDARD CONSTRUCTION DETAILS FOR WIRELESS SITES AND THE CONSTRUCTION DRAWINGS, INFORMATION ON THE CONSTRUCTION DRAWINGS SHALL TAKE PRECEDENCE.

SITE FAMILIARITY:
CONTRACTOR SHALL BE RESPONSIBLE FOR FAMILIARIZING HIMSELF WITH ALL CONTRACT DOCUMENTS, FIELD CONDITIONS AND DIMENSIONS PRIOR TO PROCEEDING WITH CONSTRUCTION.

ON-SITE SUPERVISION:
THE CONTRACTOR SHALL SUPERVISE AND DIRECT THE WORK AND SHALL BE RESPONSIBLE FOR CONSTRUCTION MEANS, METHODS, TECHNIQUES, SEQUENCES, AND PROCEDURES IN ACCORDANCE WITH THE CONTRACT DOCUMENTS.

DRAWINGS, SPECIFICATIONS AND DETAILS REQUIRED AT JOBSITE:
THE CONSTRUCTION CONTRACTOR SHALL MAINTAIN A FULL SET OF THE CONSTRUCTION DRAWINGS AT THE JOBSITE FROM MOBILIZATION THROUGH CONSTRUCTION COMPLETION.

A. DETAILS ARE INTENDED TO SHOW DESIGN INTENT. PROVIDE ALL MATERIALS AND LABOR AS REQUIRED TO PROVIDE A COMPLETE AND FUNCTIONING SYSTEM. MODIFICATIONS MAY BE REQUIRED TO SUIT JOB DIMENSIONS OR CONDITIONS, AND SUCH MODIFICATIONS SHALL BE INCLUDED AS PART OF THE WORK.

B. CONTRACTOR SHALL NOTIFY SPRINT CONSTRUCTION MANAGER OF ANY VARIATIONS PRIOR TO PROCEEDING WITH THE WORK.DIMENSIONS SHOWN ARE TO FINISH SURFACES UNLESS NOTED OTHERWISE. MODIFICATIONS MAY BE REQUIRED TO SUIT JOB DIMENSIONS OR CONDITIONS, AND SUCH MODIFICATIONS SHALL BE INCLUDED AS PART OF THE WORK.

C. MARK THE FIELD SET OF DRAWINGS IN RED, DOCUMENTING ANY CHANGES FROM THE CONSTRUCTION DOCUMENTS.

METHODS OF PROCEDURE (MOPS) FOR CONSTRUCTION:
CONTRACTOR SHALL PERFORM WORK AS DESCRIBED IN

A. COAX COLOR CODING SWEEPS AND FIBER TESTING TS-0200 AND EL-0568

B. CABLE LABELING EN-2012-00

C. APPLICABLE INSTALLATION MOPS IDENTIFIED ELSEWHERE IN THE CONTRACT DOCUMENTS

SECTION 01 200 – COMPANY FURNISHED MATERIAL AND EQUIPMENT

COMPANY FURNISHED MATERIAL AND EQUIPMENT IS IDENTIFIED ON THE RF DATA SHEET IN THE CONSTRUCTION DRAWINGS.

CONTRACTOR IS RESPONSIBLE FOR SPRINT PROVIDED MATERIAL AND EQUIPMENT TO ENSURE IT IS PROTECTED AND HANDLED PROPERLY THROUGHOUT THE CONSTRUCTION DURATION.

CONTRACTOR RESPONSIBLE FOR RECEIPT OF SPRINT FURNISHED EQUIPMENT AT CELL SITE OR CONTRACTORS LOCATION. CONTRACTOR TO COMPLETE SHIPPING AND RECEIPT DOCUMENTATION IN ACCORDANCE WITH COMPANY PRACTICE.

SECTION 01 300 – CELL SITE CONSTRUCTION

NOTICE TO PROCEED:
NO WORK SHALL COMMENCE PRIOR TO COMPANY'S WRITTEN NOTICE TO PROCEED AND THE ISSUANCE OF WORK ORDER.

SITE CLEANLINESS:
CONTRACTOR SHALL KEEP THE SITE FREE FROM ACCUMULATING WASTE MATERIAL, DEBRIS, AND TRASH. AT THE COMPLETION OF THE WORK, CONTRACTOR SHALL REMOVE FROM THE SITE ALL REMAINING RUBBISH, IMPLEMENTS, TEMPORARY FACILITIES, AND SURPLUS MATERIALS.

SECTION 01 400 – SUBMITTALS & TESTS

ALTERNATES:
AT THE COMPANY'S REQUEST, ANY ALTERNATIVES TO THE MATERIALS OR METHODS SPECIFIED SHALL BE SUBMITTED TO SPRINTS CONSTRUCTION MANAGER FOR APPROVAL. SPRINT WILL REVIEW AND APPROVE ONLY THOSE REQUESTS MADE IN WRITING. NO VERBAL APPROVALS WILL BE CONSIDERED,

TESTS AND INSPECTIONS:

A. THE CONTRACTOR SHALL BE RESPONSIBLE FOR ALL CONSTRUCTION TESTS, INSPECTIONS AND PROJECT DOCUMENTATION.

B. CONTRACTOR SHALL ACCOMPLISH TESTING INCLUDING BUT NOT LIMITED TO THE FOLLOWING:

1. COAX SWEEPS AND FIBER TESTS PER TS-0200 REV 4 ANTENNA LINE ACCEPTANCE STANDARDS.
2. AGL, AZIMUTH AND DOWNTILT PROVIDE AN AUTOMATED REPORT UPLOADED TO SITERRA USING A COMMERCIAL MADE-FOR THE PURPOSE ELECTRONIC ANTENNA ALIGNMENT TOOL (AAT). INSTALLED AZIMUTH, CENTERLINE AND DOWNTILT MUST CONFORM WITH RF CONFIGURATION DATA
3. CONTRACTOR SHALL BE RESPONSIBLE FOR ANY AND ALL CORRECTIONS TO ANY WORK IDENTIFIED AS UNACCEPTABLE IN SITE INSPECTION ACTIVITIES AND/OR AS A RESULT OF TESTING.
4. ALL TESTING REQUIRED BY APPLICABLE INSTALLATION MOPS.

C. REQUIRED CLOSEOUT DOCUMENTATION INCLUDES, BUT IS NOT LIMITED TO THE FOLLOWING;

1. AZIMUTH, DOWNTILT, AGL FROM SUNSIGHT INSTRUMENTS – ANTENNALIGN ALIGNMENT TOOL (AAT)
2. SWEEP AND FIBER TESTS
3. SCALABLE BARCODE PHOTOGRAPHS OF TOWER TOP AND INACCESSIBLE SERIALIZED EQUIPMENT
4. ALL AVAILABLE JURISDICTIONAL PERMIT AND OCCUPANCY INFORMATION
5. PDF SCAN OF REDLINES PRODUCED IN FIELD
6. A PDF SCAN OF REDLINE MARK-UPS SUITABLE FOR USE IN ELECTRONIC AS-BUILT DRAWING PRODUCTION
7. LIEN WAIVERS
8. FINAL PAYMENT APPLICATION
9. REQUIRED FINAL CONSTRUCTION PHOTOS
10. CONSTRUCTION AND COMMISSIONING CHECKLIST COMPLETE WITH NO DEFICIENT ITEMS
11. APPLICABLE POST NTP TASKS INCLUDING DOCUMENT UPLOADS COMPLETED IN SITERRA (SPRINTS DOCUMENT REPOSITORY OF RECORD).
12. CLOSEOUT PHOTOGRAPHS AND CLOSEOUT CHECKLIST: SPRINT WILL PROVIDE SEPARATE GUIDANCE

SECTION 11 700 – ANTENNA ASSEMBLY, REMOTE RADIO UNITS AND CABLE INSTALLATION

SUMMARY:
THIS SECTION SPECIFIES INSTALLATION OF ANTENNAS, RRU'S, AND CABLE EQUIPMENT, INSTALLATION, AND TESTING OF COAXIAL FIBER CABLE.

ANTENNAS AND RRU'S:
THE NUMBER AND TYPE OF ANTENNAS AND RRU'S TO BE INSTALLED IS DETAILED ON THE CONSTRUCTION DRAWINGS.

HYBRID CABLE:
HYBRID CABLE WILL BE DC/FIBER AND FURNISHED FOR INSTALLATION AT EACH SITE. CABLE SHALL BE INSTALLED PER THE CONSTRUCTION DRAWINGS AND THE APPLICABLE MANUFACTURER'S REQUIREMENTS.

JUMPERS AND CONNECTORS:
FURNISH AND INSTALL 1/2" COAX JUMPER CABLES BETWEEN THE RRU'S AND ANTENNAS. JUMPERS SHALL BE TYPE LDF 4, FLC 12-50, CR 540, OR FXL 540. SUPER-FLEX CABLES ARE NOT ACCEPTABLE. JUMPERS BETWEEN THE RRU'S AND ANTENNAS OR TOWER TOP AMPLIFIERS SHALL CONSIST OF 1/2 INCH FOAM DIELECTRIC, OUTDOOR RATED COAXIAL CABLE, MIN LENGTH FOR JUMPER SHALL BE 10'-0".

REMOTE ELECTRICAL TILT (RET) CABLES: A/E TO INSERT SPECIFICATION

MISCELLANEOUS:
INSTALL SPLITTERS, COMBINERS, FILTERS PER RF DATA SHEET, FURNISHED BY SPRINT.

ANTENNA INSTALLATION:
THE CONTRACTOR SHALL ASSEMBLE ALL ANTENNAS ONSITE IN ACCORDANCE WITH THE INSTRUCTIONS SUPPLIED BY THE MANUFACTURER. ANTENNA HEIGHT, AZIMUTH, AND FEED ORIENTATION INFORMATION SHALL BE A DESIGNATED ON THE CONSTRUCTION DRAWINGS.

A. THE CONTRACTOR SHALL POSITION THE ANTENNA ON TOWER PIPE MOUNTS SO THAT THE BOTTOM STRUT IS LEVEL. THE PIPE MOUNTS SHALL BE PLUMB TO WITHIN 1 DEGREE.

B. ANTENNA MOUNTING REQUIREMENTS: PROVIDE ANTENNA MOUNTING HARDWARE AS INDICATED ON THE DRAWINGS.

HYBRID CABLE INSTALLATION:

A. THE CONTRACTOR SHALL ROUTE, TEST, AND INSTALL ALL CABLES AS INDICATED ON THE CONSTRUCTION DRAWINGS AND IN ACCORDANCE WITH THE MANUFACTURER'S RECOMMENDATIONS.

B. THE INSTALLED RADIUS OF THE CABLES SHALL NOT BE LESS THAN THE MANUFACTURER'S SPECIFICATIONS FOR BENDING RADII.

C. EXTREME CARE SHALL BE TAKEN TO AVOID DAMAGE TO THE CABLES DURING HANDLING AND INSTALLATION.

1. FASTENING MAIN HYBRID CABLES: ALL CABLES SHALL BE INSTALLED INSIDE MONOPOLE WITH CABLE SUPPORT GRIPS AS REQUIRED BY THE MANUFACTURER.
2. FASTENING INDIVIDUAL FIBER AND DC CABLES ABOVE BREAKOUT ENCLOSURE (MEDUSA), WITHIN THE MMBS CABINET AND ANY INTERMEDIATE DISTRIBUTION BOXES:
   a. FIBER: SUPPORT FIBER BUNDLES USING ½" VELCRO STRAPS OF THE REQUIRED LENGTH @ 18" OC. STRAPS SHALL BE UV, OIL AND WATER RESISTANT AND SUITABLE FOR INDUSTRIAL INSTALLATIONS AS MANUFACTURED BY TEXTOL OR APPROVED EQUAL.
   b. DC: SUPPORT DC BUNDLES WITH ZIP TIES OF THE ADEQUATE LENGTH. ZIP TIES TO BE UV STABILIZED, BLACK NYLON, WITH TENSILE STRENGTH AT 12,000 PSI AS MANUFACTURED BY NELCO PRODUCTS OR EQUAL.
3. FASTENING JUMPERS: SECURE JUMPERS TO THE SIDE ARMS OR HEAD FRAMES USING STAINLESS STEEL TIE WRAPS OR STAINLESS STEEL BUTTERFLY CLIPS.
4. CABLE INSTALLATION:
   a. INSPECT CABLE PRIOR TO USE FOR SHIPPING DAMAGE, NOTIFY THE CONSTRUCTION MANAGER.
   b. CABLE ROUTING: CABLE INSTALLATION SHALL BE PLANNED TO ENSURE THAT THE LINES WILL BE PROPERLY ROUTED IN THE CABLE ENVELOP AS INDICATED ON THE DRAWINGS. AVOID TWISTING AND CROSSOVERS.
   c. HOIST CABLE USING PROPER HOISTING GRIPS. DO NOT EXCEED MANUFACTURES RECOMMENDED MAXIMUM BEND RADIUS.

2.5GHz EXISTING 165'-0" MONOPOLE

PLANS PREPARED FOR:
Sprint
6580 Sprint Parkway
Overland Park, Kansas 66251

PLANS PREPARED BY:

KGS CORPORATION
CONSULTING ENGINEERS
1125 REMINGTON RD., SCHAUMBURG, IL 60173
PHONE: 847-490-8200, FAX: 847-490-8225
www.kgscorp.com

OEM:

MLA PARTNER:
CROWN CASTLE
20 N. MARTINGALE RD. SUITE 440
SCHAUMBURG, IL 60173

ENGINEERING LICENSE:
LICENSED PROFESSIONAL ENGINEER
SEDMESH M. SETH
062-051288
STATE OF ILLINOIS
SIGNATURE:
DATE: 01/10/14 EXPIRES: 11/30/15

DRAWING NOTICE:

THESE DOCUMENTS ARE CONFIDENTIAL AND ARE THE SOLE PROPERTY OF SPRINT AND MAY NOT BE REPRODUCED, DISSEMINATED OR REDISTRIBUTED WITHOUT THE EXPRESS WRITTEN CONSENT OF SPRINT.

REVISIONS:

DESCRIPTION	DATE	BY	REV
2.5 FOR REVIEW	12/13/13	MS	A
2.5 REVISED PER SPRINT COMMENTS	12/24/13	MS	B
2.5 ISSUED FOR CONSTRUCTION	01/10/14	MS	0

SITE NAME:
BOHAC

SITE CASCADE:
CH03XC407

SITE ADDRESS:
19520 WEST HIGHWAY 22
LAKE ZURICH, IL
60047

SHEET DESCRIPTION:
SPRINT SPECIFICATIONS

SHEET NUMBER:
SP-1

CONTINUE FROM SP-1

5. GROUNDING OF TRANSMISSION LINES: ALL TRANSMISSION LINES SHALL BE GROUNDED AS INDICATED ON DRAWINGS.
6. HYBRID CABLE COLOR CODING: ALL COLOR CODING SHALL BE AS REQUIRED IN TS 0200 REV 4.
7. HYBRID CABLE LABELING: INDIVIDUAL HYBRID AND DC BUNDLES SHALL BE LABELED ALPHA-NUMERICALLY ACCORDING TO SPRINT CELL SITE ENGINEERING NOTICE – EN 2012-001, REV 1

WEATHERPROOFING EXTERIOR CONNECTORS AND HYBRID CABLE GROUND KITS:

A. ALL FIBER & COAX CONNECTORS AND GROUND KITS SHALL BE WEATHERPROOFED.

B. WEATHERPROOFED USING ONE OF THE FOLLOWING METHODS. ALL INSTALLATIONS MUST BE DONE IN ACCORDANCE WITH THE MANUFACTURER'S RECOMMENDATIONS AND INDUSTRY BEST PRACTICES.

1. COLD SHRINK: ENCOMPASS CONNECTOR IN COLD SHRINK TUBING AND PROVIDE A DOUBLE WRAP OF 2" ELECTRICAL TAPE EXTENDING 2" BEYOND TUBING. PROVIDE 3M COLD SHRINK CXS SERIES OR EQUAL.
2. SELF-AMALGAMATING TAPE: CLEAN SURFACES. APPLY A DOUBLE WRAP OF SELF-AMALGAMATING TAPE 2" BEYOND CONNECTOR. APPLY A SECOND WRAP OF SELF-AMALGAMATING TAPE IN OPPOSITE DIRECTION. APPLY DOUBLE WRAP OF 2" WIDE ELECTRICAL TAPE EXTENDING 2" BEYOND THE SELF-AMALGAMATING TAPE.
3. 3M SLIM LOCK CLOSURE 716: SUBSTITUTIONS WILL NOT BE ALLOWED.
4. OPEN FLAME ON JOB SITE IS NOT ACCEPTABLE

SECTION 11 800 – INSTALLATION OF MULTIMODAL BASE STATIONS (MMBS) AND RELATED EQUIPMENT

SUMMARY:

A. THIS SECTION SPECIFIES MMBS CABINETS, POWER CABINETS, AND INTERNAL EQUIPMENT INCLUDING BY NOT LIMITED TO RECTIFIERS, POWER DISTRIBUTION UNITS, BASE BAND UNITS, SURGE ARRESTORS, BATTERIES, AND SIMILAR EQUIPMENT FURNISHED BY THE COMPANY FOR INSTALLATION BY THE CONTRACTOR (OFCI).

B. CONTRACTOR SHALL PROVIDE AND INSTALL ALL MISCELLANEOUS MATERIALS AND PROVIDE ALL LABOR REQUIRED FOR INSTALLATION EQUIPMENT IN EXISTING CABINET OR NEW CABINET AS SHOWN ON DRAWINGS AND AS REQUIRE BY THE APPLICABLE INSTALLATION MOPS.

C. COMPLY WITH MANUFACTURERS INSTALLATION AND START-UP REQUIREMENTS

DC CIRCUIT BREAKER LABELING

A. NEW DC CIRCUIT IS REQUIRED IN MMBS CABINET SHALL BE CLEARLY IDENTIFIED AS TO RRU BEING SERVICED

SECTION 26 100 – BASIC ELECTRICAL REQUIREMENTS

SUMMARY:
THIS SECTION SPECIFIES BASIC ELECTRICAL REQUIREMENTS FOR SYSTEMS AND COMPONENTS.

QUALITY ASSURANCE:

A. ALL EQUIPMENT FURNISHED UNDER DIVISION 26 SHALL CARRY UL LABELS AND LISTINGS WHERE SUCH LABELS AND LISTINGS ARE AVAILABLE IN THE INDUSTRY.

B. MANUFACTURERS OF EQUIPMENT SHALL HAVE A MINIMUM OF THREE YEARS EXPERIENCE WITH THEIR EQUIPMENT INSTALLED AND OPERATING IN THE FIELD IN A USE SIMILAR TO THE PROPOSED USE FOR THIS PROJECT.

C. MATERIALS AND EQUIPMENT: ALL MATERIALS AND EQUIPMENT SPECIFIED IN DIVISION 26 OF THE SAME TYPE SHALL BE OF THE SAME MANUFACTURER AND SHALL BE NEW, OF THE BEST QUALITY AND DESIGN, AND FREE FROM DEFECTS

SUPPORTING DEVICES:

A. ALL EQUIPMENT FURNISHED UNDER DIVISION 26 SHALL CARRY UL LABELS AND LISTINGS WHERE SUCH LABELS AND LISTINGS ARE AVAILABLE IN THE INDUSTRY.

B. MANUFACTURERS OF EQUIPMENT SHALL HAVE A MINIMUM OF THREE YEARS EXPERIENCE WITH THEIR EQUIPMENT INSTALLED AND OPERATING IN THE FIELD IN A USE SIMILAR TO THE PROPOSED USE FOR THIS PROJECT.

C. MATERIALS AND EQUIPMENT:
ALL MATERIALS AND EQUIPMENT SPECIFIED IN DIVISION 26 OF THE SAME TYPE SHALL BE OF THE SAME MANUFACTURER AND SHALL BE NEW, OF THE BEST QUALITY AND DESIGN, AND FREE FROM DEFECTS

SUPPORTING DEVICES:

A. MANUFACTURED STRUCTURAL SUPPORT MATERIALS: SUBJECT TO COMPLIANCE WITH REQUIREMENTS, PROVIDE PRODUCTS BY THE FOLLOWING:

1. ALLIED TUBE AND CONDUIT
2. B-LINE SYSTEM
3. SUNISTRUT DIVERSIFIED PRODUCTS
4. THOMAS & BETTS

B. FASTENERS: TYPES, MATERIALS, AND CONSTRUCTION FEATURES AS FOLLOWS:

1. EXPANSION ANCHORS: CARBON STEEL WEDGE OR SLEEVE TYPE.
2. POWER-DRIVEN THREADED STUDS: HEAT-TREATED STEEL, DESIGNED SPECIFICALLY FOR THE INTENDED SERVICE.
3. FASTEN BY MEANS OF WOOD SCREWS ON WOOD.
4. TOGGLE BOLTS ON HOLLOW MASONRY UNITS.
5. CONCRETE INSERTS OR EXPANSION BOLTS ON CONCRETE OR SOLID MASONRY.
6. MACHINE SCREWS, WELDED THREADED STUDS, OR SPRING-TENSION CLAMPS ON STEEL.
7. EXPLOSIVE DEVICES FOR ATTACHING HANGERS TO STRUCTURE SHALL NOT BE PERMITTED.
8. DO NOT WELD CONDUIT, PIPE STRAPS, OR ITEMS OTHER THAN THREADED STUDS TO STEEL STRUCTURES.
9. IN PARTITIONS OF LIGHT STEEL CONSTRUCTION, USE SHEET METAL SCREWS.

SUPPORTING DEVICES:

A. INSTALL SUPPORTING DEVICES TO FASTEN ELECTRICAL COMPONENTS SECURELY AND PERMANENTLY IN ACCORDANCE WITH NEC.

B. COORDINATE WITH THE BUILDING STRUCTURAL SYSTEM AND WITH OTHER TRADES.

C. UNLESS OTHERWISE INDICATED ON THE DRAWINGS, FASTEN ELECTRICAL ITEMS AND THEIR SUPPORTING HARDWARE SECURELY TO THE STRUCTURE IN ACCORDANCE WITH THE FOLLOWING:

D. ENSURE THAT THE LOAD APPLIED BY ANY FASTENER DOES NOT EXCEED 25 PERCENT OF THE PROOF TEST LOAD.

E. USE VIBRATION AND SHOCK-RESISTANT FASTENERS FOR ATTACHMENTS TO CONCRETE SLABS.

ELECTRICAL IDENTIFICATION:

A. UPDATE AND PROVIDE TYPED CIRCUIT BREAKER SCHEDULES IN THE MOUNTING BRACKET, INSIDE DOORS OF AC PANEL BOARDS WITH ANY CHANGES MADE TO THE AC SYSTEM.

B. BRANCH CIRCUITS FEEDING AVIATION OBSTRUCTION LIGHTING EQUIPMENT SHALL BE CLEARLY IDENTIFIED AS SUCH AT THE BRANCH CIRCUIT PANELBOARD.

SECTION 26 200 – ELECTRICAL MATERIALS AND EQUIPMENT

CONDUIT:

A. RIGID GALVANIZED STEEL (RGS) CONDUIT SHALL BE USED FOR EXTERIOR LOCATIONS ABOVE GROUND AND IN UNFINISHED INTERIOR LOCATIONS AND FOR ENCASED RUNS IN CONCRETE. RIGID CONDUIT AND FITTINGS SHALL BE STEEL, COATED WITH ZINC EXTERIOR AND INTERIOR BY THE HOT DIP GALVANIZING PROCESS. CONDUIT SHALL BE PRODUCED TO ANSI SPECIFICATIONS C80.1, FEDERAL SPECIFICATION WW-C-581 AND SHALL BE LISTED WITH THE UNDERWRITERS' LABORATORIES. FITTINGS SHALL BE THREADED – SET SCREW OR COMPRESSION FITTINGS WILL NOT BE ACCEPTABLE. RGS CONDUITS SHALL BE MANUFACTURED BY ALLIED, REPUBLIC OR WHEATLAND.

B. UNDERGROUND CONDUIT IN CONCRETE SHALL BE POLYVINYLCHLORIDE (PVC) SUITABLE FOR DIRECT BURIAL AS APPLICABLE. JOINTS SHALL BE BELLED, AND FLUSH SOLVENT WELDED IN ACCORDANCE WITH MANUFACTURER'S INSTRUCTIONS. CONDUIT SHALL BE CARLON ELECTRICAL PRODUCTS OR APPROVED EQUAL.

C. TRANSITIONS BETWEEN PVC AND RIGID (RGS) SHALL BE MADE WITH PVC COATED METALLIC LONG SWEEP RADIUS ELBOWS.

D. EMT OR RIGID GALVANIZED STEEL CONDUIT MAY BE USED IN FINISHED SPACES CONCEALED IN WALLS AND CEILINGS. EMT SHALL BE MILD STEEL, ELECTRICALLY WELDED, ELECTRO-GALVANIZED OR HOT-DIPPED GALVANIZED AND PRODUCED TO ANSI SPECIFICATION C80.3, FEDERAL SPECIFICATION WW-C-563, AND SHALL BE UL LISTED. EMT SHALL BE MANUFACTURED BY ALLIED, REPUBLIC OR WHEATLAND, OR APPROVED EQUAL. FITTINGS SHALL BE METALLIC COMPRESSION. SET SCREW CONNECTIONS SHALL NOT BE ACCEPTABLE.

E. LIQUID TIGHT FLEXIBLE METALLIC CONDUIT SHALL BE USED FOR FINAL CONNECTION TO EQUIPMENT. FITTINGS SHALL BE METALLIC GLAND TYPE COMPRESSION FITTINGS, MAINTAINING THE INTEGRITY OF CONDUIT SYSTEM. SET SCREW CONNECTIONS SHALL NOT BE ACCEPTABLE. MAXIMUM LENGTH OF FLEXIBLE CONDUIT SHALL NOT EXCEED 6-FEET. LFMC SHALL BE PROTECTED AND SUPPORTED AS REQUIRE BY NEC. MANUFACTURERS OF FLEXIBLE CONDUITS SHALL BE CAROL, ANACONDA METAL HOSE OR UNIVERSAL METAL HOSE, OR APPROVED EQUAL.

F. MINIMUM SIZE CONDUIT SHALL BE 3/4 INCH (21MM).

HUBS AND BOXES:

A. AT ENTRANCES TO CABINETS OR OTHER EQUIPMENT NOT HAVING INTEGRAL THREADED HUBS PROVIDE METALLIC THREADED HUBS OF THE SIZE AND CONFIGURATION REQUIRED. HUB SHALL INCLUDE LOCKNUT AND NEOPRENE O-RING SEAL. PROVIDE IMPACT RESISTANT 105 DEGREE C PLASTIC BUSHINGS TO PROTECT CABLE INSULATION.

B. CABLE TERMINATION FITTINGS FOR CONDUIT

1. CABLE TERMINATORS FOR RGS CONDUITS SHALL BE TYPE CRC BY O-Z/GEDNEY OR EQUAL BY ROX TEC.
2. CABLE TERMINATORS FOR LFMC SHALL BE ETCO – CL2075; OR MADE FOR THE PURPOSE PRODUCTS BY ROXTEC.

C. EXTERIOR PULL BOXES AND PULL BOXES IN INTERIOR INDUSTRIAL AREAS SHALL BE PLATED CAST ALLOY, HEAVY DUTY, WEATHERPROOF, DUST PROOF, WITH GASKET, PLATED IRON ALLOY COVER AND STAINLESS STEEL COVER SCREWS, CROUSE-HINDS WAB SERIES OR EQUAL.

D. CONDUIT OUTLET BODIES SHALL BE PLATED CAST ALLOY WITH SIMILAR GASKETED COVERS. OUTLET BODIES SHALL BE OF THE CONFIGURATION AND SIZE SUITABLE FOR THE APPLICATION. PROVIDE CROUSE-HINDS FORM 8 OR EQUAL.

E. MANUFACTURER FOR BOXES AND COVERS SHALL BE HOFFMAN, SQUARE "D", CROUSE-HINDS, COOPER, ADALET, APPLETON, O-Z GEDNEY, RACO, OR APPROVED EQUAL.

SUPPLEMENTAL GROUNDING SYSTEM

A. FURNISH AND INSTALL A SUPPLEMENTAL GROUNDING SYSTEM TO THE EXTENT INDICATED ON THE DRAWINGS. SUPPORT SYSTEM WITH NON-MAGNETIC STAINLESS STEEL CLIPS WITH RUBBER GROMMETS. GROUNDING CONNECTORS SHALL BE TINNED COPPER WIRE, SIZES AS INDICATED ON THE DRAWINGS. PROVIDE STRANDED OR SOLID BARE OR INSULATED CONDUCTORS EXCEPTED AS OTHERWISE NOTED.

B. SUPPLEMENTAL GROUNDING SYSTEM: ALL CONNECTIONS TO BE MADE WITH CAD WELDS, EXCEPT AT EQUIPMENT USE LUGS OR OTHER AVAILABLE GROUNDING MEANS AS REQUIRED BY MANUFACTURER; AT GROUND BARS USE TWO HOLE SPADES WITH NO OX.

C. STOLEN GROUND-BARS: IN THE EVENT OF STOLEN GROUND BARS, CONTACT SPRINT CM FOR REPLACEMENT INSTRUCTION USING THREADED ROD KITS.

EXISTING STRUCTURE:

A. EXISTING EXPOSED WIRING AND ALL EXPOSED OUTLETS, RECEPTACLES, SWITCHES, DEVICES, BOXES, AND OTHER EQUIPMENT THAT ARE NOT TO BE UTILIZED IN THE COMPLETED PROJECT SHALL BE REMOVED OR DE-ENERGIZED AND CAPPED IN THE WALL, CEILING, OR FLOOR SO THAT THEY ARE CONCEALED AND SAFE. WALL, CEILING, OR FLOOR SHALL BE PATCHED TO MATCH THE ADJACENT CONSTRUCTION.

CONDUIT AND CONDUCTOR INSTALLATION:

A. CONDUITS SHALL BE FASTENED SECURELY IN PLACE WITH APPROVED NON-PERFORATED STRAPS AND HANGERS. EXPLOSIVE DEVICES FOR ATTACHING HANGERS TO STRUCTURE WILL NOT BE PERMITTED. CLOSELY FOLLOW THE LINES OF THE STRUCTURE, MAINTAIN CLOSE PROXIMITY TO THE STRUCTURE AND KEEP CONDUITS IN TIGHT ENVELOPES. CHANGES IN DIRECTION TO ROUTE AROUND OBSTACLES SHALL BE MADE WITH CONDUIT OUTLET BODIES. CONDUIT SHALL BE INSTALLED IN A NEAT AND WORKMANLIKE MANNER, PARALLEL AND PERPENDICULAR TO STRUCTURE WALL AND CEILING LINES. ALL CONDUIT SHALL BE FISHED TO CLEAR OBSTRUCTIONS. ENDS OF CONDUITS SHALL BE TEMPORARILY CAPPED TO PREVENT CONCRETE, PLASTER OR DIRT FROM ENTERING. CONDUITS SHALL BE RIGIDLY CLAMPED TO BOXES BY GALVANIZED MALLEABLE IRON BUSHING ON INSIDE AND GALVANIZED MALLEABLE IRON LOCKNUT ON OUTSIDE AND INSIDE.

B. CONDUCTORS SHALL BE PULLED IN ACCORDANCE WITH ACCEPTED GOOD PRACTICE.

2.5GHz EXISTING 165'-0" MONOPOLE

PLANS PREPARED FOR:
Sprint
6580 Sprint Parkway
Overland Park, Kansas 66251

PLANS PREPARED BY:
KCS CORPORATION
CONSULTING ENGINEERS
1125 REMINGTON RD., SCHAUMBURG, IL 60173
PHONE: 847-490-8200; FAX: 847-490-8225
www.kcscorp.com

OEM:

MLA PARTNER:
CROWN CASTLE
20 N. MARTINGALE RD. SUITE 440
SCHAUMBURG, IL 60173

ENGINEERING LICENSE:
LICENSED PROFESSIONAL ENGINEER SIDDESH M. SETH 062-051290 STATE OF ILLINOIS
SIGNATURE:
DATE: 01/10/14 EXPIRES: 11/30/15

DRAWING NOTICE:
THESE DOCUMENTS ARE CONFIDENTIAL AND ARE THE SOLE PROPERTY OF SPRINT AND MAY NOT BE REPRODUCED, DISSEMINATED OR REDISTRIBUTED WITHOUT THE EXPRESS WRITTEN CONSENT OF SPRINT.

REVISIONS:

DESCRIPTION	DATE	BY	REV
2.5 FOR REVIEW	12/13/13	MS	A
2.5 REVISED PER SPRINT COMMENTS	12/24/13	MS	B
2.5 ISSUED FOR CONSTRUCTION	01/10/14	MS	0

SITE NAME: BOHAC

SITE CASCADE: CH03XC407

SITE ADDRESS:
19520 WEST HIGHWAY 22
LAKE ZURICH, IL
60047

SHEET DESCRIPTION: SPRINT SPECIFICATIONS

SHEET NUMBER: SP-2

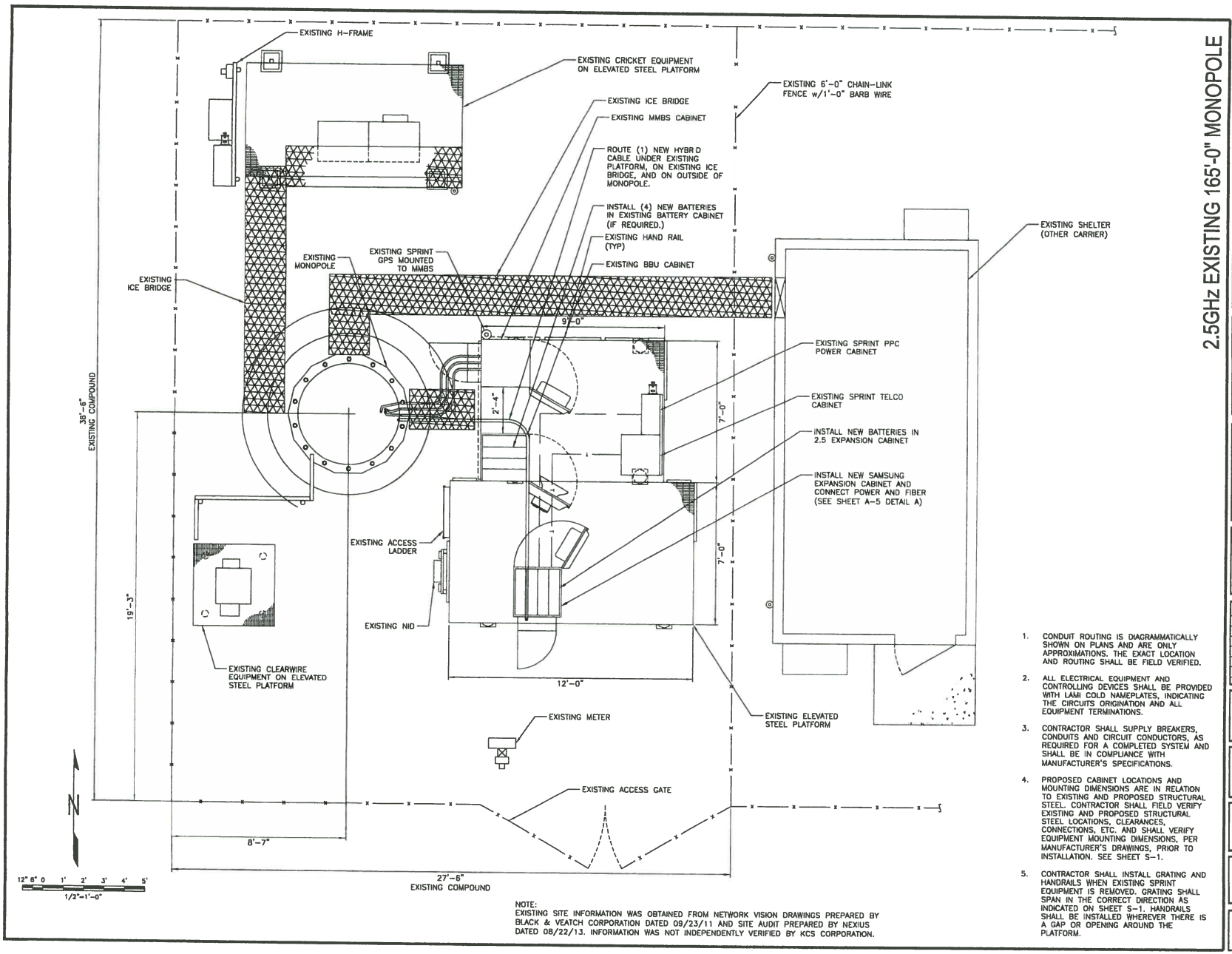

NOTE:
EXISTING SITE INFORMATION WAS OBTAINED FROM NETWORK VISION DRAWINGS PREPARED BY BLACK & VEATCH CORPORATION DATED 09/23/11 AND SITE AUDIT PREPARED BY NEXIUS DATED 08/22/13. INFORMATION WAS NOT INDEPENDENTLY VERIFIED BY KCS CORPORATION.

1. CONDUIT ROUTING IS DIAGRAMMATICALLY SHOWN ON PLANS AND ARE ONLY APPROXIMATIONS. THE EXACT LOCATION AND ROUTING SHALL BE FIELD VERIFIED.
2. ALL ELECTRICAL EQUIPMENT AND CONTROLLING DEVICES SHALL BE PROVIDED WITH LAMI COLD NAMEPLATES, INDICATING THE CIRCUITS ORIGINATION AND ALL EQUIPMENT TERMINATIONS.
3. CONTRACTOR SHALL SUPPLY BREAKERS, CONDUITS AND CIRCUIT CONDUCTORS, AS REQUIRED FOR A COMPLETED SYSTEM AND SHALL BE IN COMPLIANCE WITH MANUFACTURER'S SPECIFICATIONS.
4. PROPOSED CABINET LOCATIONS AND MOUNTING DIMENSIONS ARE IN RELATION TO EXISTING AND PROPOSED STRUCTURAL STEEL. CONTRACTOR SHALL FIELD VERIFY EXISTING AND PROPOSED STRUCTURAL STEEL LOCATIONS, CLEARANCES, CONNECTIONS, ETC. AND SHALL VERIFY EQUIPMENT MOUNTING DIMENSIONS, PER MANUFACTURER'S DRAWINGS, PRIOR TO INSTALLATION. SEE SHEET S-1.
5. CONTRACTOR SHALL INSTALL GRATING AND HANDRAILS WHEN EXISTING SPRINT EQUIPMENT IS REMOVED. GRATING SHALL SPAN IN THE CORRECT DIRECTION AS INDICATED ON SHEET S-1. HANDRAILS SHALL BE INSTALLED WHEREVER THERE IS A GAP OR OPENING AROUND THE PLATFORM.

2.5GHz EXISTING 165'-0" MONOPOLE

PLANS PREPARED FOR:
Sprint
6580 Sprint Parkway
Overland Park, Kansas 66251

PLANS PREPARED BY:
KCS CORPORATION
CONSULTING ENGINEERS
1125 REMINGTON RD., SCHAUMBURG, IL 60173
PHONE: 847-490-8200; FAX: 847-490-8225
www.kcscorp.com

OEM:

MLA PARTNER:
CROWN CASTLE
20 N. MARTINGALE RD. SUITE 440
SCHAUMBURG, IL 60173

ENGINEERING LICENSE:
LICENSED PROFESSIONAL ENGINEER
SEIDESH N. SETHI
062-051290
STATE OF ILLINOIS
SIGNATURE:
DATE: 01/10/14 EXPIRES: 11/30/15

DRAWING NOTICE:
THESE DOCUMENTS ARE CONFIDENTIAL AND ARE THE SOLE PROPERTY OF SPRINT AND MAY NOT BE REPRODUCED, DISSEMINATED OR REDISTRIBUTED WITHOUT THE EXPRESS WRITTEN CONSENT OF SPRINT.

REVISIONS:

DESCRIPTION	DATE	BY	REV
2.5 FOR REVIEW	12/13/13	MS	A
2.5 REVISED PER SPRINT COMMENTS	12/24/13	MS	B
2.5 ISSUED FOR CONSTRUCTION	01/10/14	MS	0

SITE NAME:
BOHAC

SITE CASCADE:
CH03XC407

SITE ADDRESS:
19520 WEST HIGHWAY 22
LAKE ZURICH, IL
60047

SHEET DESCRIPTION:
SITE PLAN

SHEET NUMBER:
A-1

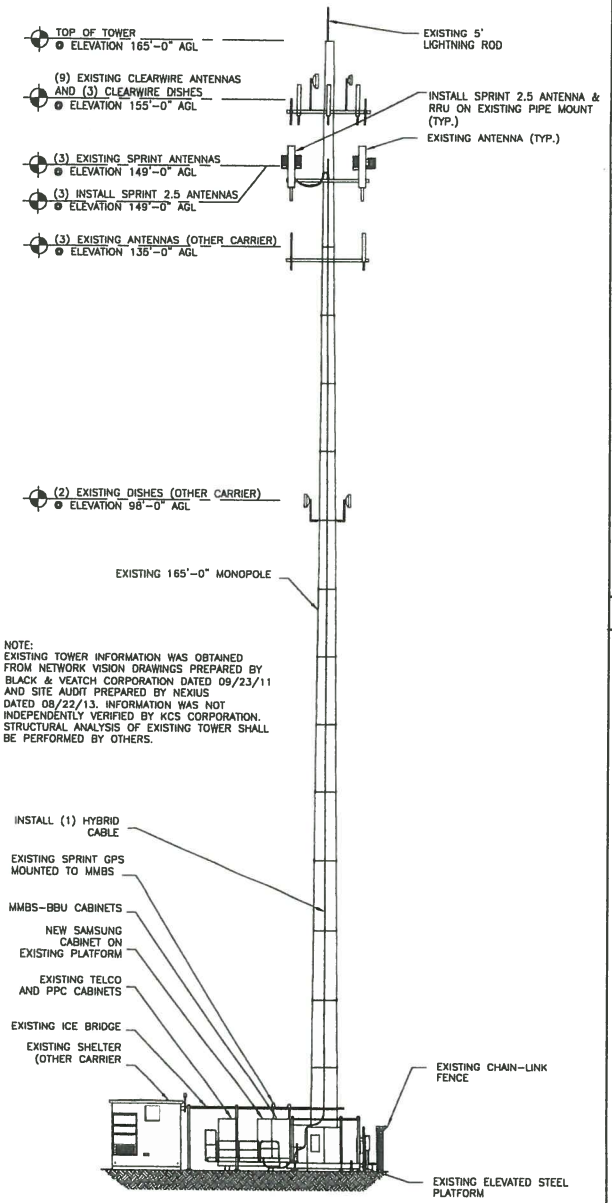

NOTE:
EXISTING TOWER INFORMATION WAS OBTAINED FROM NETWORK VISION DRAWINGS PREPARED BY BLACK & VEATCH CORPORATION DATED 09/23/11 AND SITE AUDIT PREPARED BY NEXIUS DATED 08/22/13. INFORMATION WAS NOT INDEPENDENTLY VERIFIED BY KCS CORPORATION. STRUCTURAL ANALYSIS OF EXISTING TOWER SHALL BE PERFORMED BY OTHERS.

SITE ELEVATION | NO SCALE | E

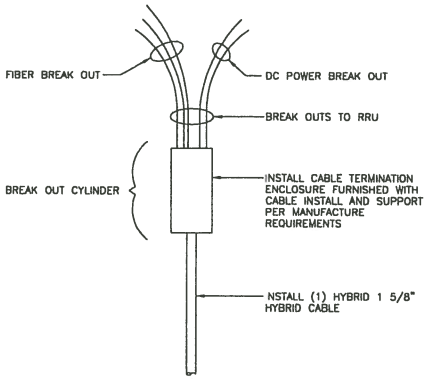

HYBRID BREAK OUT DETAIL | NO SCALE | C

DETAIL NOT USED | NO SCALE | A

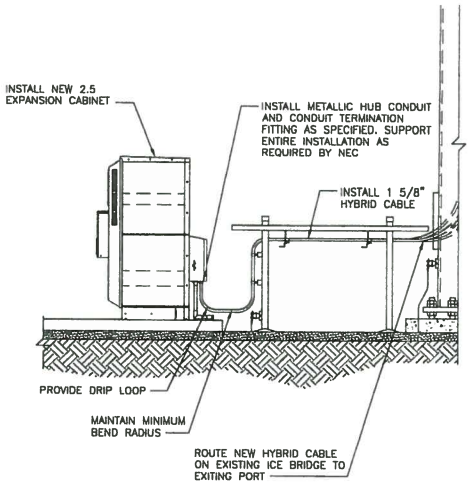

CABLE ROUTE FROM CABINET | NO SCALE | D

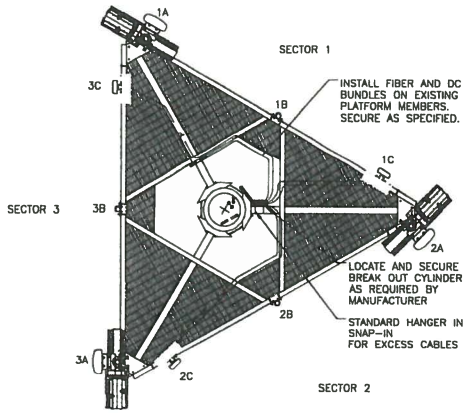

TYPICAL HYBRID DETAIL | NO SCALE | B

2.5GHz EXISTING 165'-0" MONOPOLE

PLANS PREPARED FOR:
Sprint
6580 Sprint Parkway
Overland Park, Kansas 66251

PLANS PREPARED BY:
KCS CORPORATION
CONSULTING ENGINEERS
1125 REMINGTON RD., SCHAUMBURG, IL 60173
PHONE: 847-490-8200; FAX: 847-490-8225
www.kcscorp.com

OEM:

MLA PARTNER:
CROWN CASTLE
20 N. MARTINGALE RD. SUITE 440
SCHAUMBURG, IL 60173

ENGINEERING LICENSE:
LICENSED PROFESSIONAL ENGINEER
SEDNESH M. SETH
062-051290
STATE OF ILLINOIS
SIGNATURES
DATE: 01/10/14 EXPIRES: 11/30/15

DRAWING NOTICE:
THESE DOCUMENTS ARE CONFIDENTIAL AND ARE THE SOLE PROPERTY OF SPRINT AND MAY NOT BE REPRODUCED, DISSEMINATED OR REDISTRIBUTED WITHOUT THE EXPRESS WRITTEN CONSENT OF SPRINT.

REVISIONS:

DESCRIPTION	DATE	BY	REV
2.5 FOR REVIEW	12/13/13	MS	A
2.5 REVISED PER SPRINT COMMENTS	12/24/13	MS	B
2.5 ISSUED FOR CONSTRUCTION	01/10/14	MS	0

SITE NAME:
BOHAC

SITE CASCADE:
CH03XC407

SITE ADDRESS:
19520 WEST HIGHWAY 22
LAKE ZURICH, IL
60047

SHEET DESCRIPTION:
TOWER ELEVATION & CABLE PLAN

SHEET NUMBER:
A-2

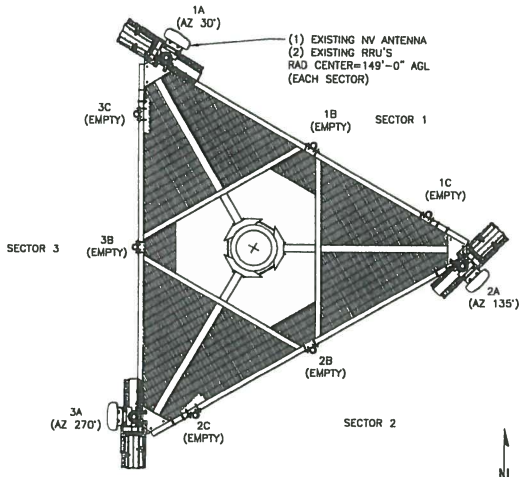

EXISTING ANTENNA & RRU LAYOUT @ 149'-0" | NO SCALE | C

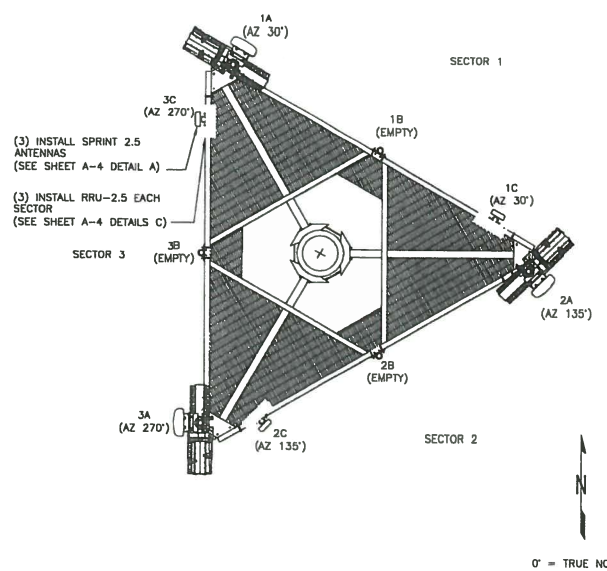

FINAL ANTENNA LAYOUT @ 149'-0" | NO SCALE | A

DETAIL NOT USED | NO SCALE | D

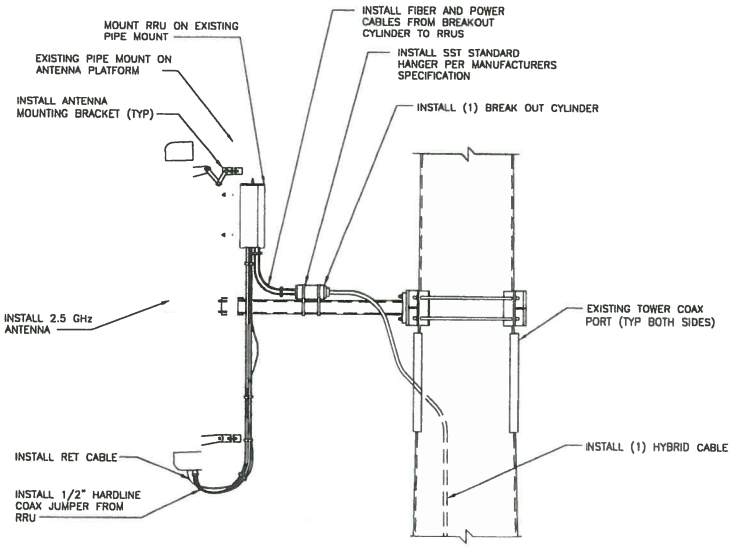

ANTENNA, RRU & BREAK-OUT MOUNTING DETAILS | NO SCALE | B

2.5GHz EXISTING 165'-0" MONOPOLE

PLANS PREPARED FOR:

Sprint

6580 Sprint Parkway
Overland Park, Kansas 66251

PLANS PREPARED BY:

KCS CORPORATION
CONSULTING ENGINEERS
1125 REMINGTON RD., SCHAUMBURG, IL 60173
PHONE: 847-490-8200; FAX: 847-490-8223
www.kcscorp.com

OEM:

MLA PARTNER:

CROWN CASTLE

20 N. MARTINGALE RD. SUITE 440
SCHAUMBURG, IL 60173

ENGINEERING LICENSE:

LICENSED PROFESSIONAL ENGINEER
SIDDESH M. SETH
062-051190
STATE OF ILLINOIS

SIGNATURE:
DATE: 01/10/14 EXPIRES: 11/30/15

DRAWING NOTICE:

THESE DOCUMENTS ARE CONFIDENTIAL AND ARE THE SOLE PROPERTY OF SPRINT AND MAY NOT BE REPRODUCED, DISSEMINATED OR REDISTRIBUTED WITHOUT THE EXPRESS WRITTEN CONSENT OF SPRINT.

REVISIONS:

DESCRIPTION	DATE	BY	REV
2.5 FOR REVIEW	12/13/13	MS	A
2.5 REVISED PER SPRINT COMMENTS	12/24/13	MS	B
2.5 ISSUED FOR CONSTRUCTION	01/10/14	MS	0

SITE NAME:

BOHAC

SITE CASCADE:

CH03XC407

SITE ADDRESS:

19520 WEST HIGHWAY 22
LAKE ZURICH, IL
60047

SHEET DESCRIPTION:

ANTENNA LAYOUT
& MOUNTING DETAILS

SHEET NUMBER:

A-3

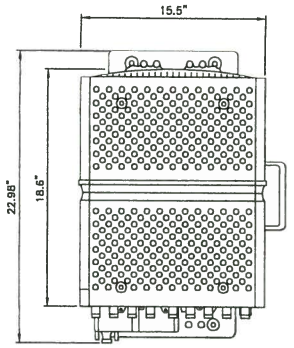

FRONT VIEW

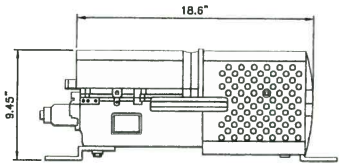

SIDE VIEW

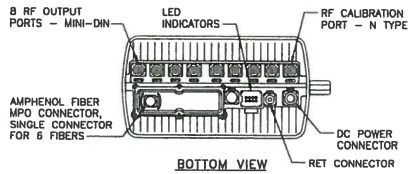

BOTTOM VIEW

DIMENSIONS, HxWxD:	(18.6"x15.5"x9.45")
RRU WEIGHT:	59.5 lbs
MOUNTING KIT WEIGHT:	12.32 lbs

NOTES

COMPLY WITH MANUFACTURERS INSTRUCTIONS TO ENSURE THAT ALL RRU'S RECEIVE ELECTRICAL POWER WITHIN 24 HOURS OF BEING REMOVED FROM THE MANUFACTURER'S PACKAGING. DO NOT OPEN RRU PACKAGES IN THE RAIN.

2.5 RRUS	NO SCALE	C

DETAIL NOT USED | NO SCALE | D

ANTENNA KMW ET-X-WM-18-65-8P

RADOME COLOR:	LIGHT GRAY
DIMENSIONS, HxWxD.in(mm):	61"x12"x4.3" (1550x305x110mm)
WEIGHT:	36.4 lbs
CONNECTORS:	(8) MINI DIN FEMALE

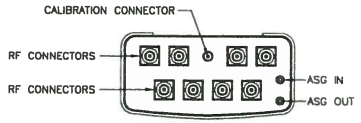

PLAN VIEW

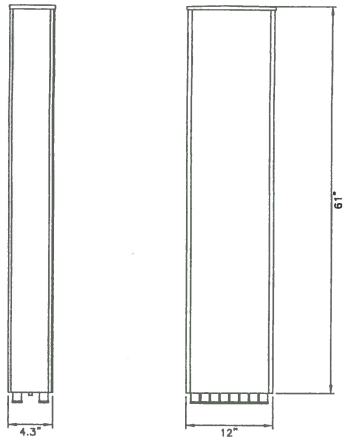

2.5 ANTENNA | NO SCALE | A

DETAIL NOT USED | NO SCALE | B

2.5GHz EXISTING 165'-0" MONOPOLE

PLANS PREPARED FOR:

Sprint

6580 Sprint Parkway
Overland Park, Kansas 66251

PLANS PREPARED BY:

KCS CORPORATION
CONSULTING ENGINEERS
1125 REMINGTON RD., SCHAUMBURG, IL 60173
PHONE: 847-490-8200, FAX: 847-490-8225
www.kcscorp.com

OEM:

MLA PARTNER:

CROWN CASTLE

20 N. MARTINGALE RD. SUITE 440
SCHAUMBURG, IL 60173

ENGINEERING LICENSE:

LICENSED PROFESSIONAL ENGINEER
SIDNEY M. SETH
062-051288
STATE OF ILLINOIS

SIGNATURE:
DATE: 01/10/14 EXPIRES: 11/30/15

DRAWING NOTICE:

THESE DOCUMENTS ARE CONFIDENTIAL AND ARE THE SOLE PROPERTY OF SPRINT AND MAY NOT BE REPRODUCED, DISSEMINATED OR REDISTRIBUTED WITHOUT THE EXPRESS WRITTEN CONSENT OF SPRINT.

REVISIONS:

DESCRIPTION	DATE	BY	REV
2.5 FOR REVIEW	12/13/13	MS	A
2.5 REVISED PER SPRINT COMMENTS	12/24/13	MS	B
2.5 ISSUED FOR CONSTRUCTION	01/10/14	MS	0

SITE NAME:

BOHAC

SITE CASCADE:

CH03XC407

SITE ADDRESS:

19520 WEST HIGHWAY 22
LAKE ZURICH, IL
60047

SHEET DESCRIPTION:

EQUIPMENT DETAILS

SHEET NUMBER:

A-4

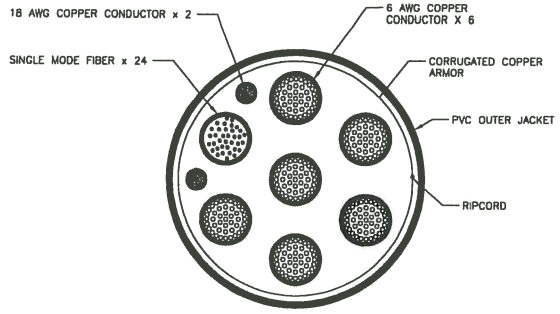

NOTE: CABLE CROSS-SECTION NOT DRAWN TO SCALE

CABLE TYPE	Number, size (awg)	6/C #6 + 2/C #18
	Voltage	600
	Outer Jacket	PVC
	Shielding	Corrugated Copper
	Max shield resistance (ohm/ft @ 20 c)	0.0035
	Drain	n/a
	Ripchord	Kevlar
	Dc conductor material	Copper
	Dc conductor size (awg)	6
	Max Dc resistance (ohm/1000ft)	0.411 @ 20 deg C
	Color Code	Black/Red
	Alarm Conductor Material	Copper
	Alarm conductor size (awg)	18
	Max Dc resistance (ohm/1000ft)	6.7
	Color Code	TBD
	Fiber Cables	SM
	Outer Diameter (in) - Nominal	1.24
	Weight (lb/ft)	1.05
	Minimum Bend Radius (in)	15
	Bend Moment (lb/ft)	TBD
	Tensil Strength (lb)	325
	Crush Resistance, FOTP-41 (N/mm)	22
	Strength Member	No
	Operating Temperature Range (low)	-40 deg C
	Operating Temperature Range (high)	+80 deg C
Fiber Type		Low Water Peak Single Mode Loose Tube
Fiber Standard Compliance		ITU-T Rec. G.652.D, G657.A2
		IEC 60793-2-50 Type B.1.3 & Type B.6 A&B
Fiber Coating Diameter (um)		.242 +/- 0.007mm 0.9 +/- 0.005mm
Fiber Count		24
Number of fiber subunits		1
Fiber count each units		24
Fiber count jackets		FR Jacket
Max attenuation, 1310 nm (db/km)		Less than equa 0.5
Max attenuation, 1550 nm (db/km)		Less than equa 0.5

HYBRID CABLE X-SECTION AND DATA | NO SCALE | C

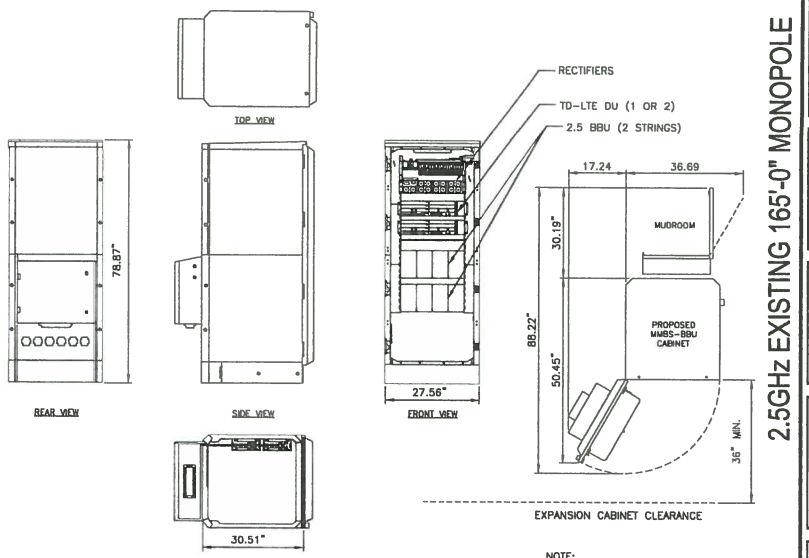

NOTE:
INSTALL NEW SAMSUNG BATTERIES IN 2.5 GHz EXPANSION CABINET

EXPANSION CABINET WITH 2.5 EQUIPMENT | NO SCALE | A

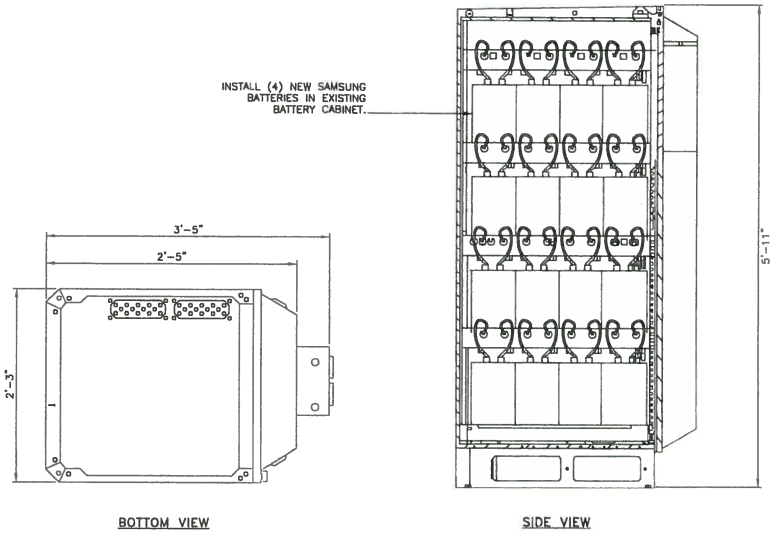

EXISTING BATTERY CABINET | NO SCALE | B

2.5GHz EXISTING 165'-0" MONOPOLE

PLANS PREPARED FOR:

Sprint
6580 Sprint Parkway
Overland Park, Kansas 66251

PLANS PREPARED BY:

KCS CORPORATION
CONSULTING ENGINEERS
1125 REMINGTON RD., SCHAUMBURG, IL 60173
PHONE: 847-490-8200, FAX: 847-490-8225
www.kcscorp.com

OEM:

MLA PARTNER:

CROWN CASTLE
20 N. MARTINGALE RD. SUITE 440
SCHAUMBURG, IL 60173

ENGINEERING LICENSE:

LICENSED PROFESSIONAL ENGINEER
SEOKESH N. SETH
062-051250
STATE OF ILLINOIS

SIGNATURE:
DATE: 01/10/14 EXPIRES: 11/30/15

DRAWING NOTICE:

THESE DOCUMENTS ARE CONFIDENTIAL AND ARE THE SOLE PROPERTY OF SPRINT AND MAY NOT BE REPRODUCED, DISSEMINATED OR REDISTRIBUTED WITHOUT THE EXPRESS WRITTEN CONSENT OF SPRINT.

REVISIONS:

DESCRIPTION	DATE	BY	REV
2.5 FOR REVIEW	12/13/13	MS	A
2.5 REVISED PER SPRINT COMMENTS	12/24/13	MS	B
2.5 ISSUED FOR CONSTRUCTION	01/10/14	MS	0

SITE NAME:
BOHAC

SITE CASCADE:
CH03XC407

SITE ADDRESS:
19520 WEST HIGHWAY 22
LAKE ZURICH, IL
60047

SHEET DESCRIPTION:
EQUIPMENT DETAILS

SHEET NUMBER:
A-5

LEGEND:

- EXISTING GROUND RING
- CADWELD CONNECTION (EXOTHERMIC WELD)
- MECHANICAL CONNECTION
- GROUND ROD

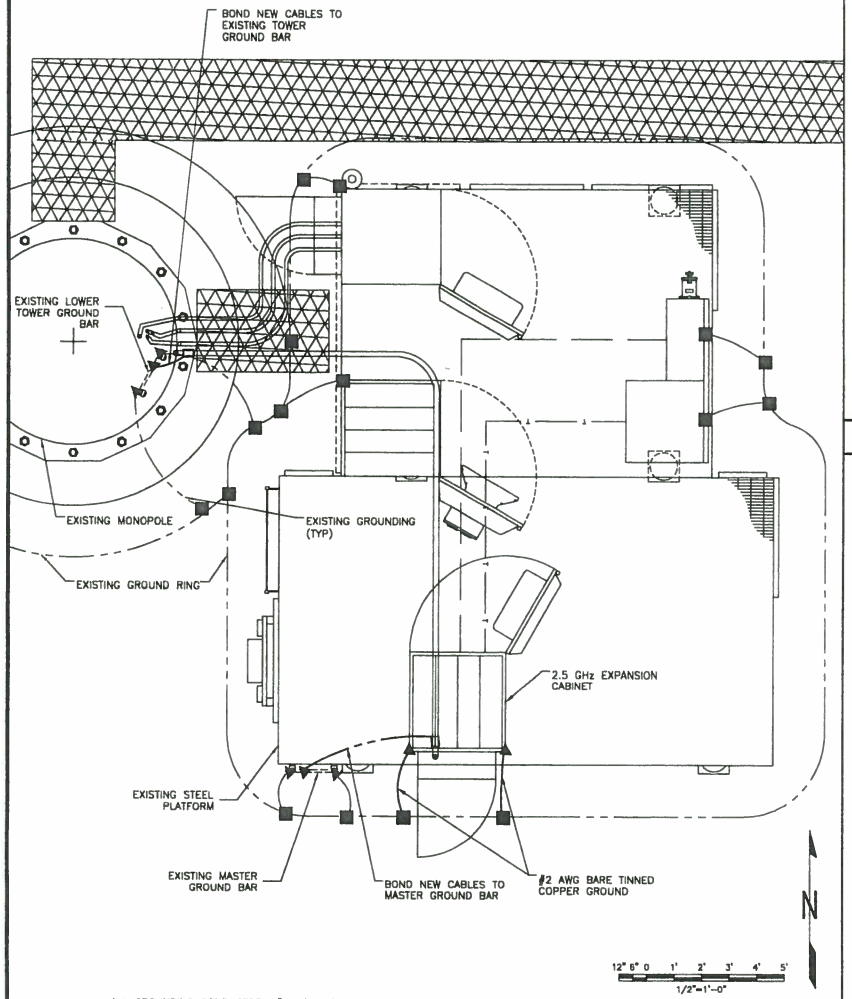

ALL GROUNDING CONDUCTORS #6 AWG BARE SOLID TINNED COPPER EXCEPT AS OTHERWISE NOTED.

EQUIPMENT GROUNDING PLAN | 1/2"=1'-0" | C

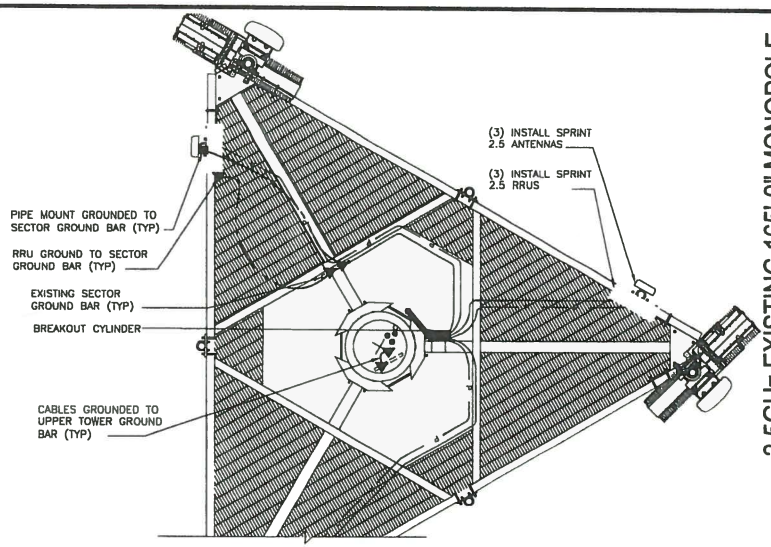

2.5GHz EXISTING 165'-0" MONOPOLE

ALL GROUNDING CONDUCTORS #6 AWG BARE SOLID TINNED COPPER EXCEPT AS OTHERWISE NOTED.

ANTENNA GROUNDING PLAN (TYP) | NO SCALE | A

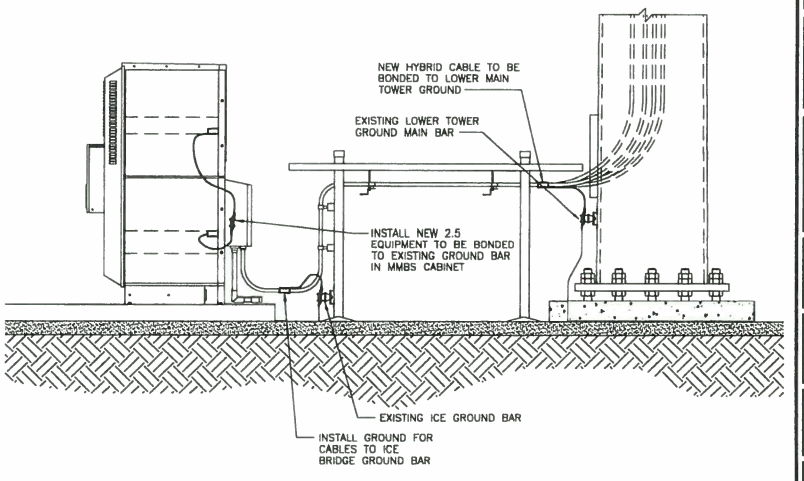

ALL GROUNDING CONDUCTORS #6 AWG BARE SOLID TINNED COPPER EXCEPT AS OTHERWISE NOTED.

EQUIPMENT GROUND ELEVATION | NO SCALE | B

PLANS PREPARED FOR:

Sprint
6580 Sprint Parkway
Overland Park, Kansas 66251

PLANS PREPARED BY:

KCS CORPORATION
CONSULTING ENGINEERS
1125 REMINGTON RD., SCHAUMBURG, IL 60173
PHONE: 847-490-8200; FAX: 847-490-8220
www.kcscorp.com

OEM:

MLA PARTNER:

CROWN CASTLE
20 N. MARTINGALE RD. SUITE 440
SCHAUMBURG, IL 60173

ENGINEERING LICENSE:

LICENSED PROFESSIONAL ENGINEER
RESHESH M. SETH
062-051298
STATE OF ILLINOIS

SIGNATURE:
DATE: 01/10/14 EXPIRES: 11/30/15

DRAWING NOTICE:

THESE DOCUMENTS ARE CONFIDENTIAL AND ARE THE SOLE PROPERTY OF SPRINT AND MAY NOT BE REPRODUCED, DISSEMINATED OR REDISTRIBUTED WITHOUT THE EXPRESS WRITTEN CONSENT OF SPRINT.

REVISIONS:

DESCRIPTION	DATE	BY	REV
2.5 FOR REVIEW	12/13/13	MS	A
2.5 REVISED PER SPRINT COMMENTS	12/24/13	MS	B
2.5 ISSUED FOR CONSTRUCTION	01/10/14	MS	0

SITE NAME:

BOHAC

SITE CASCADE:

CH03XC407

SITE ADDRESS:

19520 WEST HIGHWAY 22
LAKE ZURICH, IL
60047

SHEET DESCRIPTION:

GROUNDING & ELECTRICAL PLAN

SHEET NUMBER:

E-1

NOTES

1 CONNECTIONS:
ALL GROUNDING CONNECTIONS SHALL BE MADE BY THE CADWELD PROCESS CONNECTIONS SHALL INCLUDE ALL CABLE TO CABLE, SPLICES, ETC. ALL CABLE TO GROUND RODS, GROUND RODS SPLICES AND LIGHTING PROTECTION SYSTEM AS INDICATED GROUND FOUNDATION ONLY AS INDICATED BY PM. ALL MATERIALS USED (MOLDS, WELDING, METAL, TOOLS, ETC.) SHALL BE CADWELD PROCESS AND INSTALLED PER MANUFACTURERS RECOMMENDATIONS AND PROCEDURES. GROUND CONDUCTOR SHALL HAVE A MINIMUM 24" BENDING RADIUS.

2. ALL CADWELD CONNECTIONS ON GALVANIZED SURFACES SHALL BE CLEANED THOROUGHLY AND COLORED TO MATCH SURFACE WITH (2) TWO COATS OF GALVITE (WHITE) PAINT, OR SILVERBRITE (ALUMINUM).

3. ALL ELECTRICAL & MECHANICAL GROUND CONNECTIONS SHALL HAVE ANTIOXIDANT COMPOUND APPLIED TO CONNECTION.

4 ALL GROUNDING CONDUCTORS #6 AWG BARE SOLID TINNED COPPER EXCEPT AS OTHERWISE NOTED.

5. ALL ABOVE GROUND WIRES SHALL BE GREEN JACKETED. ALL GROUND WIRES PENETRATING INTO GROUND AND BELOW SHALL BE SOLID BARE.

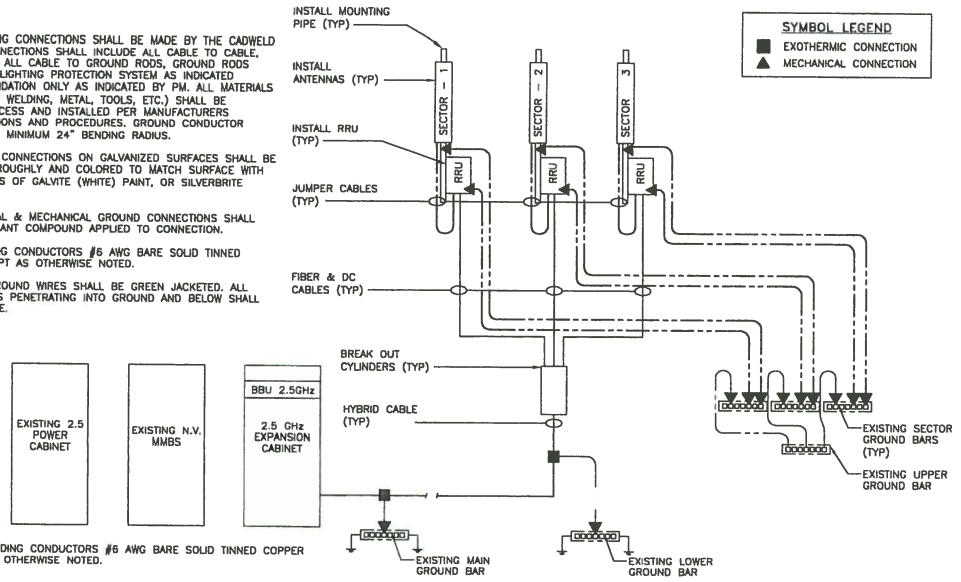

ALL GROUNDING CONDUCTORS #6 AWG BARE SOLID TINNED COPPER EXCEPT AS OTHERWISE NOTED.

GROUNDING RISER DIAGRAM | NO SCALE | C

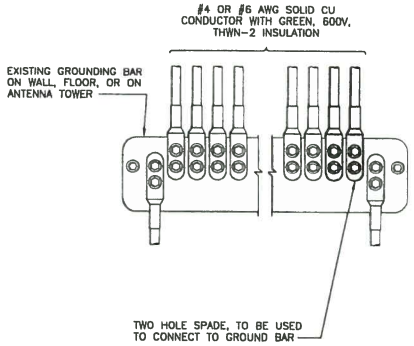

NOTES

1. APPLY NO-OX TO LUG AND BAR CONTACT SURFACE. DO NOT COAT INLINE LUG.

2. IF STOLEN GROUND BARS ARE ENCOUNTERED, CONTACT SPRINT CM FOR REPLACEMENT THREADED ROD KIT.

INSTALLATION OF GROUNDING CONDUCTOR TO GROUNDING BAR | NO SCALE | A

2.5GHz EXISTING 165'-0" MONOPOLE

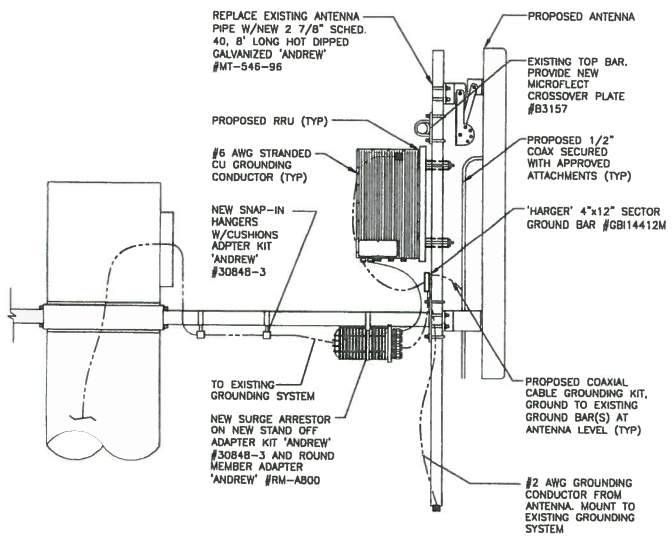

ANTENNA GROUNDING | NO SCALE | D

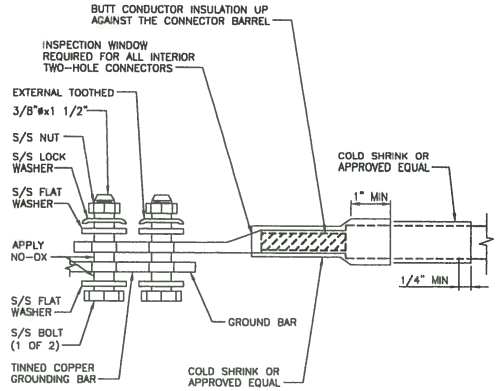

TWO HOLE LUG | NO SCALE | B

PLANS PREPARED FOR:
Sprint
6580 Sprint Parkway
Overland Park, Kansas 66251

PLANS PREPARED BY:
KGS CORPORATION
CONSULTING ENGINEERS
1125 REMINGTON RD., SCHAUMBURG, IL 60173
PHONE: 847-490-8200; FAX: 847-490-8225
www.kgscorp.com

OEM:

MLA PARTNER:
CROWN CASTLE
20 N. MARTINGALE RD. SUITE 440
SCHAUMBURG, IL 60173

ENGINEERING LICENSE:
LICENSED PROFESSIONAL ENGINEER
SEDIESH M. SETH
062-051109
STATE OF ILLINOIS
SIGNATURE:
DATE: 01/10/14 EXPIRES: 11/30/15

DRAWING NOTICE:
THESE DOCUMENTS ARE CONFIDENTIAL AND ARE THE SOLE PROPERTY OF SPRINT AND MAY NOT BE REPRODUCED, DISSEMINATED OR REDISTRIBUTED WITHOUT THE EXPRESS WRITTEN CONSENT OF SPRINT.

REVISIONS:

DESCRIPTION	DATE	BY	REV
2.5 FOR REVIEW	12/13/13	MS	A
2.5 REVISED PER SPRINT COMMENTS	12/24/13	MS	B
2.5 ISSUED FOR CONSTRUCTION	01/10/14	MS	0

SITE NAME:
BOHAC

SITE CASCADE:
CH03XC407

SITE ADDRESS:
19520 WEST HIGHWAY 22
LAKE ZURICH, IL
60047

SHEET DESCRIPTION:
GROUNDING DETAILS

SHEET NUMBER:
E-2

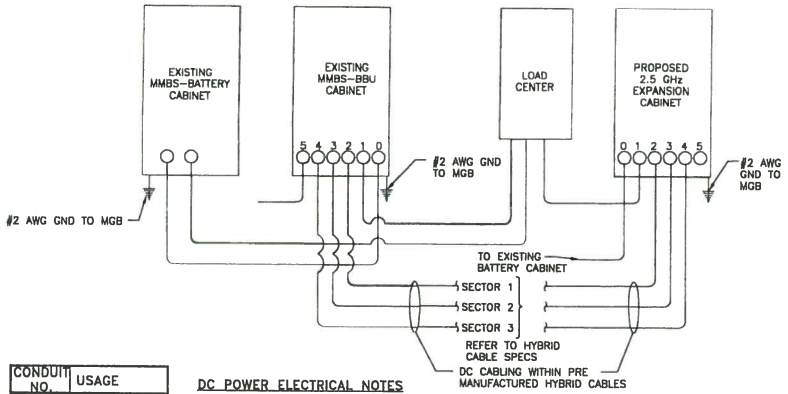

CONDUIT NO.	USAGE
0	BATTERY
1	AC/GROUND
2	RRU SECTOR 1
3	RRU SECTOR 2
4	RRU SECTOR 3
5	CIENA

DC POWER ELECTRICAL NOTES

1. MINIMUM CABLE LENGTH BETWEEN THE DU AND BATTERY IS 70MM (2.75 in).
2. MAXIMUM CABLE LENGTH DISTANCE IS 900mm (35.43" in).
3. ROUTE DC CONDUCTORS IN CONDUITS TO PROPOSED MMBS–BBU CABINET 48VDC POWER DISTRIBUTION PANEL TO AND FROM PROPOSED MMBS–BATTERY CABINET.
4. –48 VDC CABLES BETWEEN PROPOSED MMBS–BBU CABINET & RRU'S ARE FACTORY ASSEMBLED AND EQUIPPED WITH ONE PRE–TERMINATED END.
5. ALL FIELD INSTALLED DC CABLING SHALL BE TYPE RHH/RHW AND SHALL BE UL THERMOSET INSULATED.

DC ONE LINE DIAGRAM | NO SCALE | C

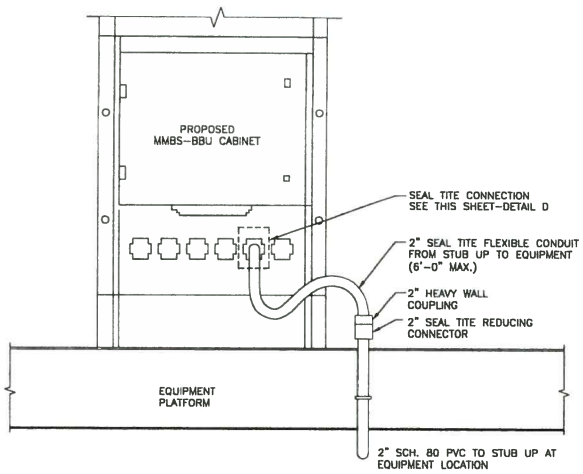

EQUIPMENT POWER CONDUIT CONNECTIONS | NO SCALE | A

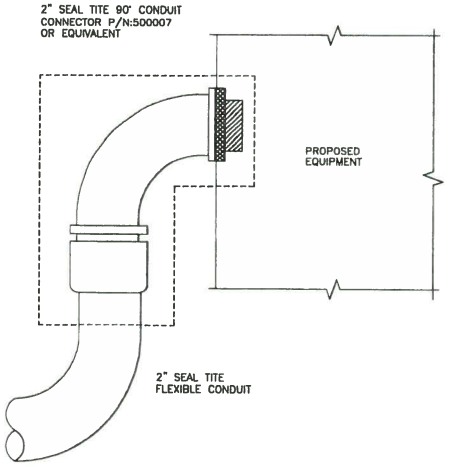

SEAL TITE POWER CONDUIT CONNECTION TO PROPOSED EQUIPMENT DETAIL | NO SCALE | D

DETAIL NOT USED | NO SCALE | B

2.5GHz EXISTING 165'-0" MONOPOLE

PLANS PREPARED FOR:
Sprint
6580 Sprint Parkway
Overland Park, Kansas 66251

PLANS PREPARED BY:
KGS CORPORATION
CONSULTING ENGINEERS
1125 REMINGTON RD., SCHAUMBURG, IL 60173
PHONE: 847-490-8200; FAX: 847-490-8225
www.kgscorp.com

OEM:

MLA PARTNER:
CROWN CASTLE
20 N. MARTINGALE RD. SUITE 440
SCHAUMBURG, IL 60173

ENGINEERING LICENSE:
LICENSED PROFESSIONAL ENGINEER
SIDNEY M. SETH
062-051780
STATE OF ILLINOIS
SIGNATURE:
DATE: 01/10/14 EXPIRES: 11/30/15

DRAWING NOTICE:
THESE DOCUMENTS ARE CONFIDENTIAL AND ARE THE SOLE PROPERTY OF SPRINT AND MAY NOT BE REPRODUCED, DISSEMINATED OR REDISTRIBUTED WITHOUT THE EXPRESS WRITTEN CONSENT OF SPRINT.

REVISIONS:

DESCRIPTION	DATE	BY	REV
2.5 FOR REVIEW	12/13/13	MS	A
2.5 REVISED PER SPRINT COMMENTS	12/24/13	MS	B
2.5 ISSUED FOR CONSTRUCTION	01/10/14	MS	0

SITE NAME:
BOHAC

SITE CASCADE:
CH03XC407

SITE ADDRESS:
19520 WEST HIGHWAY 22
LAKE ZURICH, IL
60047

SHEET DESCRIPTION:
DC POWER & DISTRIBUTION

SHEET NUMBER:
E-3

NOTES

GC SHALL REFERENCE ALL SPECS FOR "CONNECTING THE POWER SUPPLY" OF THE NEW INSTALLATION DOCUMENTS, FOR ALL CONNECTION SPECIFICATIONS.

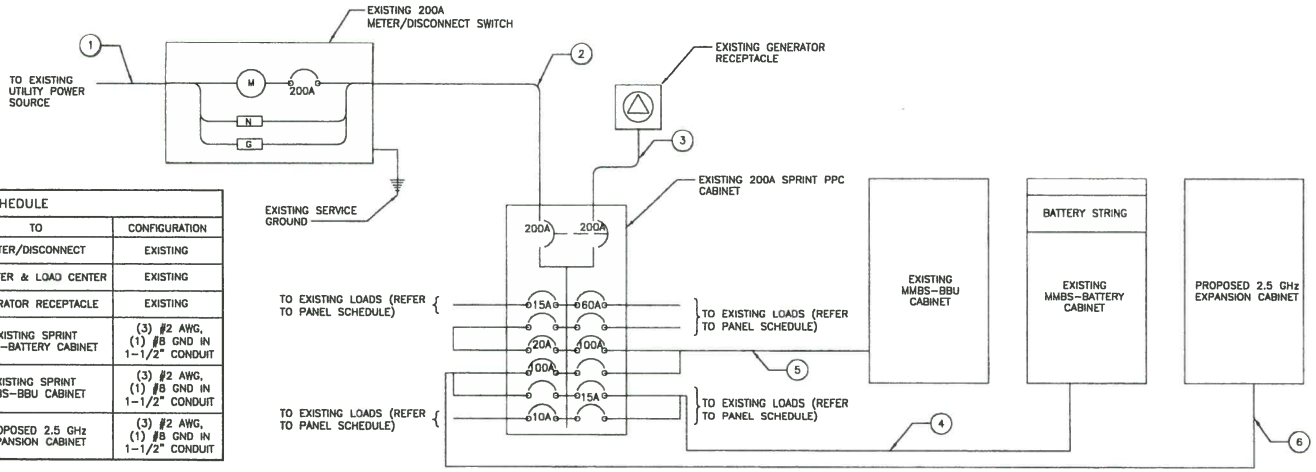

CIRCUIT SCHEDULE			
NO	FROM	TO	CONFIGURATION
1	UTILITY SOURCE	METER/DISCONNECT	EXISTING
2	METER/DISCONNECT	TRANSFER & LOAD CENTER	EXISTING
3	TRANSFER & LOAD CENTER	GENERATOR RECEPTACLE	EXISTING
4	TRANSFER & LOAD CENTER	EXISTING SPRINT MMBS-BATTERY CABINET	(3) #2 AWG, (1) #8 GND IN 1-1/2" CONDUIT
5	TRANSFER & LOAD CENTER	EXISTING SPRINT MMBS-BBU CABINET	(3) #2 AWG, (1) #8 GND IN 1-1/2" CONDUIT
6	TRANSFER & LOAD CENTER	PROPOSED 2.5 GHz EXPANSION CABINET	(3) #2 AWG, (1) #8 GND IN 1-1/2" CONDUIT

2.5GHz EXISTING 165'-0" MONOPOLE

ELECTRICAL ONE-LINE DIAGRAM — NO SCALE — A

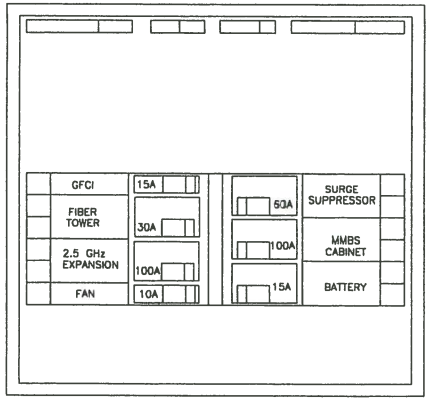

AC PANEL AT PPC POWER STATION — NO SCALE — C

SITE NUMBER:	CH03XC407			MODEL NUMBER:	TBD										
VOLTAGE:	240/120V			PHASE:	1		WIRE:				3				
MAIN BREAKER:	200 AMP			BUSS RATING:	200 AMPS		A/C:				TBD				
MOUNT:	SURFACE			NEUTRAL BAR:	YES		GROUND BAR:				TBD				
ENCLOSURE TYPE:	NEMA 3R			N to GND BOND:	TBD										
PANEL STATUS:	EXISTING			INTERNAL TVSS:	TBD										
CKT	LOAD DESCRIPTION	BREAKER AMPS	BREAKER POLES	BREAKER STATUS	SERVICE LOAD VA	USAGE FACTOR	PHASE A VA	PHASE B VA	USAGE FACTOR	SERVICE LOAD VA	BREAKER STATUS	BREAKER POLES	BREAKER AMPS	LOAD DESCRIPTION	CKT
1	GFCI	15	1	ON	180	1.00	180		1.00	0	ON	2	60	SURGE	7
2	FIBER TOWER	100	2	ON	100	1.00		100	1.00	0	ON	...	...	...	8
3	...	...	...	ON	100	1.00	8850		1.25	7000	ON	2	100	MMBS	9
4	2.5 GHz EXPANSION	100	2	PROPOSED	7000	1.25		17500	1.25	7000	ON	...	...	...	10
5	...	...	...	PROPOSED	7000	1.25	9150		1.00	400	ON	2	15	BATTERY	11
6	FAN	10	1	ON	200	1.00		600	1.00	400	ON	...	...	...	12
							18180	18200	VA			TOTAL KVA	36.38		
												AMPS	151.58	< 160 AMPS PER NEC	

NOTE:
EXISTING SITE LOADS INFORMATION WAS OBTAINED FROM NETWORK VISION DRAWING E-4 PREPARED BY BLACK & VEATCH CORPORATION DATED 09/23/11. SEE DETAIL C THIS SHEET FOR CURRENT AC PANEL LAYOUT. FIBER TOWER CIRCUIT LOADS TO BE VERIFIED BEFORE NEW A/C LOAD CALCULATION CAN BE MADE. INFORMATION WAS NOT INDEPENDENTLY VERIFIED BY KCS CORPORATION.

A/C LOAD CALCULATION — NO SCALE — B

PLANS PREPARED FOR:
Sprint
6580 Sprint Parkway
Overland Park, Kansas 66251

PLANS PREPARED BY:
KCS CORPORATION
CONSULTING ENGINEERS
1125 REMINGTON RD., SCHAUMBURG, IL 60173
PHONE: 847-490-8200; FAX: 847-490-8223
www.kcscorp.com

OEM:

MLA PARTNER:
CROWN CASTLE
20 N. MARTINGALE RD. SUITE 440
SCHAUMBURG, IL 60173

ENGINEERING LICENSE:
LICENSED PROFESSIONAL ENGINEER
SIDDHESH M. SETHI
062-051208
STATE OF ILLINOIS
SIGNATURE:
DATE: 01/10/14 EXPIRES: 11/30/15

DRAWING NOTICE:
THESE DOCUMENTS ARE CONFIDENTIAL AND ARE THE SOLE PROPERTY OF SPRINT AND MAY NOT BE REPRODUCED, DISSEMINATED OR REDISTRIBUTED WITHOUT THE EXPRESS WRITTEN CONSENT OF SPRINT.

REVISIONS:

DESCRIPTION	DATE	BY	REV
2.5 FOR REVIEW	12/13/13	MS	A
2.5 REVISED PER SPRINT COMMENTS	12/24/13	MS	B
2.5 ISSUED FOR CONSTRUCTION	01/10/14	MS	0

SITE NAME:
BOHAC

SITE CASCADE:
CH03XC407

SITE ADDRESS:
19520 WEST HIGHWAY 22
LAKE ZURICH, IL
60047

SHEET DESCRIPTION:
A/C POWER DISTRIBUTION

SHEET NUMBER:
E-4

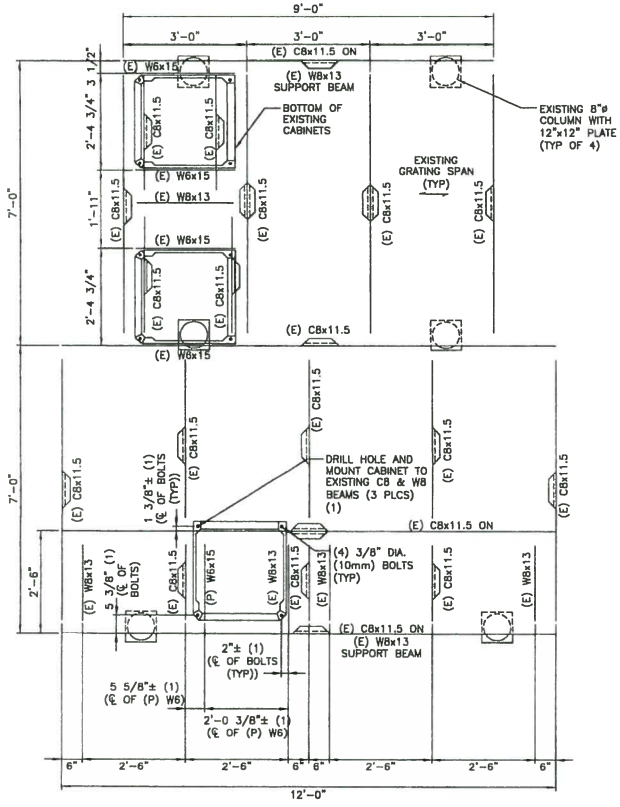

1. CONTRACTOR SHALL FIELD VERIFY EXISTING STRUCTURAL STEEL MEMBER SIZES, CLEARANCES, CONNECTIONS, ETC. PRIOR TO PROPOSED STEEL FABRICATION OR INSTALLATION. CONTRACTOR SHALL VERIFY ALL EQUIPMENT MOUNTING DIMENSIONS, PER MANUFACTURER'S DRAWINGS, PRIOR TO INSTALLATION. CONTRACTOR SHALL INSTALL PROPOSED STEEL IN ACCORDANCE WITH PROPOSED CABINET MOUNTING DIMENSIONS AND LOCATIONS. ANY DISCREPANCIES SHALL BE BROUGHT TO THE ATTENTION OF THE ENGINEER PRIOR TO PROCEEDING WITH CONSTRUCTION.
2. CONTRACTOR SHALL REMOVE EXISTING GRATING AT THE PROPOSED CABINET LOCATION AND INSTALL 1"x3/16" GALVANIZED STEEL GRATING (OR SIZE TO MATCH EXISTING GRATING HEIGHT). GRATING SHALL SPAN IN THE PROPOSED DIRECTION AS INDICATED AND SHALL BE ADEQUATELY CONNECTED TO EXISTING STEEL MEMBERS. GRATING AND W6 BEAMS SHALL BE INSTALLED PRIOR TO INSTALLATION OF PROPOSED SPRINT CABINETS.

LEGEND

(E) – EXISTING STEEL
(P) – PROPOSED STEEL
↕ – GRATING SPAN

N

SCALE: 3/4" = 1'-0"

EXISTING STEEL PLATFORM DETAIL | 3/4" = 1'-0" | A

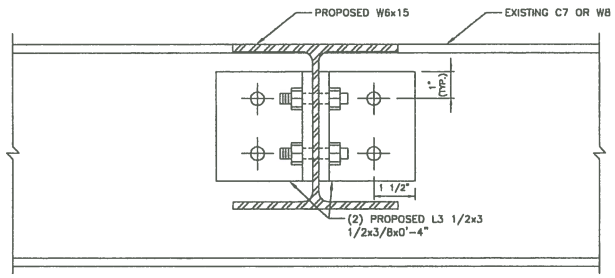

TYPICAL W6 TO CHANNEL CONNECTION | NO SCALE | B

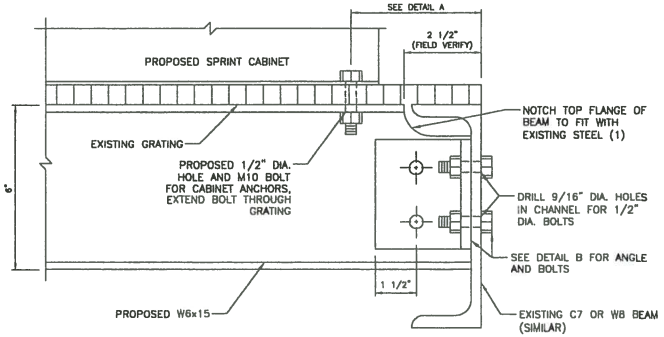

TYPICAL W6 TO WF CONNECTION | NO SCALE | C

2.5GHz EXISTING 165'-0" MONOPOLE

PLANS PREPARED FOR:

Sprint
6580 Sprint Parkway
Overland Park, Kansas 66251

PLANS PREPARED BY:

KGS CORPORATION
CONSULTING ENGINEERS
1123 REMINGTON RD., SCHAUMBURG, IL 60173
PHONE: 847-490-8200; FAX: 847-490-8225
www.kgscorp.com

OEM:

MLA PARTNER:

CROWN CASTLE
20 N. MARTINGALE RD. SUITE 440
SCHAUMBURG, IL 60173

ENGINEERING LICENSE:

SIGNATURE:
DATE: 01/10/14 EXPIRES: 11/30/15

DRAWING NOTICE:

THESE DOCUMENTS ARE CONFIDENTIAL AND ARE THE SOLE PROPERTY OF SPRINT AND MAY NOT BE REPRODUCED, DISSEMINATED OR REDISTRIBUTED WITHOUT THE EXPRESS WRITTEN CONSENT OF SPRINT.

REVISIONS:

DESCRIPTION	DATE	BY	REV
2.5 FOR REVIEW	12/13/13	MS	A
2.5 REVISED PER SPRINT COMMENTS	12/24/13	MS	B
2.5 ISSUED FOR CONSTRUCTION	01/10/14	MS	0

SITE NAME:

BOHAC

SITE CASCADE:

CH03XC407

SITE ADDRESS:

19520 WEST HIGHWAY 22
LAKE ZURICH, IL
60047

SHEET DESCRIPTION:

STRUCTURAL DETAILS

SHEET NUMBER:

S-1

Village of Long Grove Illinois

3110 Old McHenry Road 60047-9635
Phone: 847-634-9440 Fax: 847-634-9408
www.longgrove.net

RECEIVED
FEB 05 2014
VILLAGE OF LONG GROVE

PLAN COMMISSION ZONING BOARD OF APPEALS
GENERAL ZONING APPLICATION

1.0 General Information (See Subsection 5-11-8(E) of the Long Grove Zoning Code).

1.1 Applicant Name: Amanda RoK - Agent for Owner

Address: 11 Grandview Cir. Suite 220

Telephone Number: 724-416-2315 E-mail Address: Amanda.RoK@CrownCastle.com

Fax number: 724-416-4661

Applicant's Interest in Property: -

1.2 Owner (if different from Applicant).

Name: Crown Castle

Address: 11 Grandview Cir. Suite 220

Telephone Number: 724-416-2315 E-mail Address: _____

Fax number: 724-416-4661

1.3 Property.

Address of Property: 19520 West Highway 22 Lake Zurich, IL 60047

Legal Description: Please attach Parcel Index Number(s): 14-13-300006

Present Zoning Classification _____ Size of Property (in acres) 166 SQ FT

Has any zoning reclassification, variation, or special use permit/PUD been granted for the Property?
Yes:_____ No:X

If yes, please identify the ordinance or other document granting such zoning relief:_____

Midwest Area
Crown Castle
11 Grandview Circle
Canonsburg, PA 15317

Tel (724) 416-2315
Fax (724) 416-4661
www.crowncastle.com

February 4, 2014

Village of Long Grove
Plan Commission
3310 Old McHenry Road
Long Grove, IL 60047

RE: Crown Castle Site Name: CH03XC407
Site Location Address: 19520 West Highway 22 Lake Zurich, IL 60047
Site #: BU 875565

Dear Department Representative:

Crown Castle is submitting for approval, an application for a Special Use Permit, for the tower site listed at the above referenced location.

As part of the application process, Crown Castle would like to assure your jurisdiction that based upon our records; the wireless communication facility is structurally sound and has not been modified in any material way since its initial construction. Furthermore, to the best of Crown Castle's knowledge, both the wireless communication facility and site compound have been properly and safely maintained. Crown Castle will continue to maintain this site in accordance with the terms of the Ground Lease Agreement, including all amendments, as well as within industry standards.

The application packet attached includes:

- (1) Application for Special Use Permit
- (1) Structural Analysis
- (1) Construction Drawing
- (2) Check: CK#4949 and 4950 for processing fee

If possible, please mail the Building Permit to:
Crown Castle
Attn: Amanda Rok
11 Grandview Circle, Suite 220
Canonsburg, PA 15317

Please notify me of any fees and I will ensure they are promptly paid. Requests for additional information and/or documentation can be directed to me at 724-416-2315 or Amanda.Rok@crowncastle.com.

On behalf of Crown Castle, I would like to thank you for your assistance and I look forward to your prompt response.

Sincerely,

Amanda W. Rok
Real Estate Specialist, Midwest Area

Describe the nature of the zoning relief granted: Adding equipment to cell tower.

Present use of Property:

Residential _____ Commercial X Office_____ Open Space _____ Vacant _____

Other (explain) _____

Present zoning and land use of surrounding properties within 250' of Property:

	Zoning Classification	Land Use
North:	N/A	_____
South:	N/A	_____
East:	N/A	_____
West:	N/A	_____

1.4 Trustees Disclosure.

Is title to the Property in a land trust? Yes_____ No_____

If yes, full disclosure of all trustees, beneficiaries and their legal and equitable interests is required. Attach a copy of all documents showing ownership of the Property and the Applicant's and/ or Owner's control of or interest in the Property.

1.5 Requested Action (Check as many as are applicable).

_____ Appeal	_____ Code Interpretation
_____Variation	X Special Use Permit (non-PUD)
_____ Zoning Map Amendment (rezoning)	_____ Zoning Code Text Amendment
_____ Preliminary PUD Plat	_____ Final PUD Plat

1.6 Supplemental Information (General):**

Every Application filed shall, in addition to the data and information required above, provide the following general information when applicable to the use or development for which approval is being sought:

(a) A description or graphic representation of any development or construction that will occur or any use that will be established or maintained if the requested relief is granted.

(b) A table showing the following, as applicable:

- the total lot area of the lot, in acres and in square feet; and

- the total existing and proposed lot area, expressed in acres, in square feet and as a percent of the total development area, devoted to: residential uses, business uses; office uses; college uses; institutional uses; open space; rights-of-way; streets; and off-street parking and loading areas; and

- the existing and proposed number of dwelling units; and gross and net floor area devoted to residential uses, business uses, office uses, college uses, and institutional uses.

(c) A table listing all bulk, space, and yard requirements; all parking requirements; and all loading requirements applicable to any proposed development or construction and showing the compliance of such proposed development or construction with each such requirement. When any lack of compliance is shown, the reason therefore shall be stated and an explanation of the village's authority, if any, to approve the Application despite such lack of compliance shall be set forth.

(d) The certificate of a registered architect or civil engineer licensed by the State of Illinois, or of an owner-designer, that any proposed use, construction, or development complies with all provisions of this code and other village ordinances or complies with such provisions except in the manner and to the extent specifically set forth in said certificate.

(e) A landscape development plan, including the location, size and species of plant materials.

1.7 <u>Supplemental Information (per specific request)</u>:

_____ Appeals, Code Interpretations, and Variations: See 5-11-8(E)3, 4, & 5 of the Zoning Code and Form "A"

_____ Special Use Permit (non-PUD): See 5-11-8(E)7 of the Zoning Code and Form "B"

_____ Zoning Map Amendment (rezoning): See 5-11-8(E) 8 of the Zoning Code and Form "C"

_____ Zoning Code Text Amendment: See Form "D"

_____ Preliminary PUD Plat: See 5-11-18(D)(2) of the Zoning Code and Form "E"

_____ Final PUD Plat: See 5-11-18(D)(3) of the Zoning Code and Form "F"

** The scope and detail of information shall be appropriate to the subject matter of the Application, with special emphasis on those matters likely to be affected or impacted by the approval being sought in the Application. Information required in the application shall be considered the minimum information required for filing an application. Additional information including but not limited to graphic depictions, environmental impacts, plans for sewer and water service and storm water management, photometric plans, traffic studies and effects on property values, among others, should also be considered and may be helpful in detailing the Application.

<u>Special Data Requests</u>. In addition to the data and information required pursuant to this Application, every Applicant/Owner shall submit such other additional data, information, or documentation as the

building superintendent or any board or commission before which the Application is pending may deem necessary or appropriate to a full and proper consideration and disposition of the particular Application.

1.8 Consultants.

Please provide the name, address, and telephone number of each professional or consultant advising Applicant with respect to this Application, including architects, contractors, engineers or attorneys:

Name: Front Line
Professional: Contractor
Address: 1292 Humbracht Cir. Unit 2
Telephone: 847-366-4296
E-mail: _____

Name: Seemesh M. Stethi
Professional: Engineer
Address: 1125 Remington Rd. Schaumburg, IL 60173
Telephone: 847-490-8200
E-mail: _____

Name: _____
Professional: _____
Address: _____
Telephone: _____
E-mail: _____

Name: _____
Professional: _____
Address: _____
Telephone: _____
E-mail: _____

1.9 Village Officials or Employees.

Does any official or employee of the Village have an interest, either directly or indirectly, in the Property? Yes: _____ No: /

If yes, please identify the name of such official or employee and the nature and extent of that interest. (Use a separate sheet of paper if necessary.)

1.10 Successive Applications (5-11-9).

Second Applications Without New Grounds Barred. Whenever any Application filed pursuant to this code has been finally denied on its merits, a second Application seeking essentially the same relief, whether or not in the same form or on the same theory, shall not be brought unless in the opinion of the officer, board, or commission before which it is brought there is substantial new evidence available or a mistake of law or fact significantly affected the prior denial.

New Grounds to Be Stated. Any such second Application shall include a detailed statement of the grounds justifying consideration of such Application.

Summary Denial With or Without Hearing. Any such second Application may be denied by the building superintendent summarily, and without hearing, on a finding that no grounds appear that warrant a new hearing. In any case where such Application is set for hearing, the owner shall be required to establish grounds warranting reconsideration of the merits of its Application prior to being allowed to offer any evidence on the merits. Unless such grounds are established, the Application may be summarily dismissed for such failure.

Exception. Whether or not new grounds are stated, any such second Application filed more than two years after the final denial of a prior Application shall be heard on the merits as though no prior Application had been filed. The Applicant or Owner shall, however, be required to place in the record all evidence available concerning changes of conditions or new facts that have developed since the denial of the first Application. In the absence of such evidence, it shall be presumed that no new facts exist to support the new petition that did not exist at the time of the denial of the first Application.

2.0 Required Submittals (See Specific Supplemental Information Form for filing Fees).

_____ Fully completed Application with applicable supplementary information

_____ Non-refundable Filing Fee. Amount: $ 100.00

_____ Planning Filing Fees. Amount: $ 1,000.00

Non Refundable

_____ Minimum Professional Fee/deposit Escrow. Amount $ 5,000

3.0 Certifications. The Applicant and Owner certify that this Application is filed with the permission and consent of the Owner of the Property and that the person signing this Application is fully authorized to do so.

3.1 The Applicant certifies that all information contained in this Application is true and correct to the best of Applicant's knowledge.

3.2 The Applicant acknowledges that the Village may seek additional information relating to this Application and agrees to provide the Village with such information in a timely manner. Failure to provide such information may be grounds for denying an Application.

3.3 The Applicant and Owner agree to reimburse the Village for any and all costs relating to the processing of this Application, including any consultants' fees. By signing this Application, Applicant and Owner agree to be jointly and severally liable for such costs, and Owner further agrees to the filing and foreclosure of a lien against the Property for all such costs plus all expenses relating to collection, if such costs are not paid within 30 days after mailing of a demand for payment.

3.4 The Applicant agrees that the Village and its representatives have the right, and are hereby granted permission and a license, to enter upon the Property, and into any structures located there on, for purposes of conducting any inspections that may be necessary in connection with this Application.

3.5 **The Owner, Applicant, and/or designated representative is *required* to be present during the meeting.**

Crown Castle
Name of Owner

Amanda RK - Agent for Owner
Name of Applicant

Signature of Owner Date

Amanda RK 2/4/14
Signature of Applicant Date

LEGAL NOTICE
VILLAGE OF LONG GROVE, ILLINOIS

NOTICE OF A PUBLIC HEARING FOR CONSIDERATION OF A SPECIAL USE PERMIT AND/OR ADDITIONAL RELIEF NECESSARY AND/OR APPROPRIATE UNDER THE ZONING CODE TO ALLOW THE CONTINUED OPERATION AND MAINTENANCE OF AWIRELESS COMMUNICATION ANTENNA AND RELATED FACILITIES AND THE CO-LOCATION OF ADDITIONAL ANTENNAS ON THE EXISTING MONOPOLE TELECOMMUNICATIONS TOWER AT 4210 ILLINOIS ROUTE 22 AND ZONED UNDER THE R-1 ZONING DISTRICT CLASSIFICATION WITHIN THE VILLAGE OF LONG GROVE, ILLINOIS

PUBLIC NOTICE IS HEREBY GIVEN that on Tuesday, March 4, 2014 at 7:00 p.m., a public hearing will be held at the regular meeting of the Plan Commission & Zoning Board Appeals of the Village of Long Grove, Lake County, Illinois, at the Long Grove Village Hall 3110 RFD, Long Grove, Illinois 60047, (unless otherwise posted) in connection with a petition to allow the continued operation and maintenance of a wireless communications antenna and related facilities and any other relief necessary to allow co-location of additional antennas on the existing monopole telecommunications tower at 4210 Illinois Route 22 and within the R-1 Zoning District. No reclassification of the subject property is requested. The subject property is legally described as follows:

That part of the Southwest quarter of Section 13, Township 43 North, Range 10 East of the Third Principal Meridian, described as follows: commencing at the intersection of a line lying 132 feet West of a parallel to the East line of said Southwest Quarter with the South line of said Southwest Quarter; thence North 00 degrees 12 minutes 35 seconds West along said parallel line 478.50 feet; thence South 87 degrees 51 minutes and 48 seconds East, 24.93 feet to the point of beginning; thence North 02 degrees 08 minutes 12 seconds East, 10 feet; thence South 87 degrees, 51 minutes 48 seconds East, 30.00 feet; thence South 02 degrees 08 minutes 12 seconds West, 10.00 feet; thence North 87 degrees 51 minutes 48 seconds West 30.00 feet to the point of beginning , containing 300 square feet, all in Lake County, Illinois.

Commonly known as: 4210 Illinois Route 22 (previously 19520 W. Hwy 22)
Long Grove, Illinois, 60047.
PIN: 14-13-300-006

Persons attending the hearing shall have the opportunity to provide written and oral comments and questions concerning the proposal. The above information, together with the plans for the property, will be available for inspection at the Long Grove Village Hall, 3110 RFD, Long Grove, Illinois during regular business hours.

The Plan Commission & Zoning Board of Appeals reserves the rights to continue the hearing to a later date and time and place should that become necessary.

James M. Hogue
Village Planner
Village of Long Grove
Published in Daily Herald
Feb. 12, 2014 (4365035)

RECEIVED

FEB 18 2014

VILLAGE OF LONG GROVE

CERTIFICATE OF PUBLICATION

Paddock Publications, Inc.

Daily Herald

Corporation organized and existing under and by virtue of the laws of the State of Illinois, DOES HEREBY CERTIFY that it is the publisher of the **DAILY HERALD**. That said **DAILY HERALD** is a secular newspaper and has been circulated daily in the Village(s) of Algonquin, Antioch, Arlington Heights, Aurora, Barrington, Barrington Hills, Lake Barrington, North Barrington, South Barrington, Bartlett, Batavia, Buffalo Grove, Burlington, Campton Hills, Carpentersville,Cary,Deer Park, Des Plaines, South Elgin, East Dundee, Elburn, Elgin,Elk Grove Village, Fox Lake, Fox River Grove, Geneva, Gilberts,Grayslake, Green Oaks, Gurnee, Hainesville, Hampshire, Hanover Park,Hawthorn Woods, Hoffman Estates, Huntley, Inverness, Island Lake,Kildeer, Lake Villa, Lake in the Hills, Lake Zurich, Libertyville,Lincolnshire, Lindenhurst, Long Grove, Mt.Prospect, Mundelein,Palatine, Prospect Heights, Rolling Meadows, Round Lake, Round Lake Beach,Round Lake Heights,Round Lake park,Schaumburg, Sleepy Hollow, St. Charles, Streamwood, Tower Lakes, Vernon Hills, Volo, Wauconda, Wheeling, West Dundee, Wildwood, Sugar Grove, North Aurora

County(ies) of Cook, Kane, Lake, McHenry and State of Illinois, continuously for more than one year prior to the date of the first publication of the notice hereinafter referred to and is of general circulation throughout said Village(s), County(ies) and State.

I further certify that the DAILY HERALD is a newspaper as defined in "an Act to revise the law in relation to notices" as amended in 1992 Illinois Compiled Statutes, Chapter 7150, Act 5, Section 1 and 5. That a notice of which the annexed printed slip is a true copy, was published February 12, 2014 in said DAILY HERALD.

IN WITNESS WHEREOF, the undersigned, the said PADDOCK PUBLICATIONS, Inc., has caused this certificate to be signed by, this authorized agent, at Arlington Heights, Illinois.

PADDOCK PUBLICATIONS, INC.
DAILY HERALD NEWSPAPERS

BY Paula Baltzman
Authorized Agent

Control # 4365035