FINAL SITE DEVELOPMENT PLANS
FOR

HARBORCHASE OF LONG GROVE

LONG GROVE, ILLINOIS

WATERMAIN-SANITARY SEWER-STREET-STREET LIGHTING AND DRAINAGE IMPROVEMENTS

LEGEND

EXISTING	PROPOSED	DESCRIPTION
		MANHOLE
		CATCH BASIN
		INLET
		CLEANOUT
		SLOPE INLET BOX
		HEADWALL
		END SECTION
		STORM SEWER
		SANITARY SEWER
		WATERMAIN
		VALVE & BOX
		WATER VALVE IN VAULT
		FIRE HYDRANT
		CONTOURS
(ELEV)	ELEV	ELEVATIONS
		STREET LIGHT
		WATERMAIN PROTECTION
		SILT FENCE INLET PROTECTOR
		TEMPORARY STRAW BALE DITCH CHECK
		SILT FENCE DITCH CHECK
		RIP-RAP
		OVERFLOW ROUTE

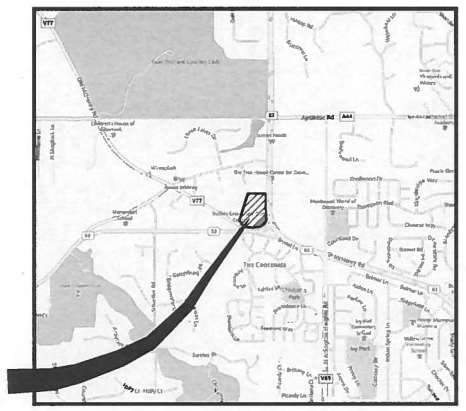

LOCATION MAP

N

INDEX OF SHEETS

1. TITLE SHEET
2.-3. CONSTRUCTION SPECIFICATIONS - GENERAL NOTES
4. STREET PAVEMENT DESIGN AND DETAILS
5.-6. DEMOLITION PLAN
7.-9. GEOMETRIC, LIGHTING AND PARKING LOT SIGNAGE PLAN
10.-11. OVERALL UTILITY PLAN
12. STORMWATER POLLUTION PREVENTION PLAN
13.-14. OVERALL SOIL EROSION AND SEDIMENTATION CONTROL PLAN
15. SOIL EROSION AND SEDIMENTATION CONTROL DETAILS
16.-18. DRAINAGE AND GRADING PLAN
19.-20. CONSTRUCTION DETAILS

BENCH MARKS

PROJECT ELEVATION REFERENCE MARKS/CONTROL POINTS

CP#103-FOUND "X" ON TOP OF CURB AT NOSE OF CONCRETE ISLAND ON THE WEST SIDE OF ROUTE 83 NEAR NORTHEAST CORNER OF SITE.

N: 2007597.176 E: 1077359.123 ELEV.:731.36 (NAVD 88)

CP#105-CUT "X" ON HAND HOLE ON THE ISLAND AT THE INTERSECTION OF ROUTE 53 AND OLD MCHENRY ROAD ON THE NORTH SIDE OF ROUTE 53.

N: 2006789.132 E: 1076754.241 ELEV.:732.015 (NAVD 88)

PROFESSIONAL ENGINEER'S CERTIFICATION

STATE OF ILLINOIS)
SS.
COUNTY OF DU PAGE)

I, KIMBERLY M. MORGART , A LICENSED PROFESSIONAL ENGINEER OF ILLINOIS, HEREBY CERTIFY THAT THIS TECHNICAL SUBMISSION WAS PREPARED ON BEHALF OF HARBOR RETIREMENT ASSOCIATES, BY CEMCON, LTD. UNDER MY PERSONAL DIRECTION. THIS TECHNICAL SUBMISSION IS INTENDED TO BE USED AS AN INTEGRAL PART OF AND IN CONJUNCTION WITH THE PROJECT SPECIFICATIONS AND CONTRACT DOCUMENTS.

DATED THIS ____DAY OF _____, A.D., 2014.

_____
ILLINOIS LICENSED PROFESSIONAL ENGINEER NO. 062-058001
MY LICENSE EXPIRES ON NOVEMBER 30, 2015

PROFESSIONAL DESIGN FIRM LICENSE NUMBER 184-002937
EXPIRES APRIL 30, 2015

NOTE : UNLESS THIS DOCUMENT BEARS THE ORIGINAL SIGNATURE AND IMPRESSED SEAL OR STAMP OF THE DESIGN PROFESSIONAL ENGINEER, IT IS NOT A VALID TECHNICAL SUBMISSION.

FOR UNDERGROUND UTILITY LOCATIONS, CALL
J.U.L.I.E.
TOLL FREE
TEL. 1-800-892-0123 or 811

DATE: _____

RELEASED FOR PLAN REVIEW AND PERMIT PROCESSING ONLY.

IF USED FOR BIDDING PURPOSES, THOSE PARTIES CONCERNED SHALL BE ADVISED THAT REVISIONS MAY BE REQUIRED PRIOR TO PLAN APPROVAL.

NOT ISSUED FOR CONSTRUCTION UNTIL APPROVED BY THE VILLAGE OF LONG GROVE AND PERMITTED AS REQUIRED.

Copyright © 2014 Cemcon, Ltd. All rights reserved.

PREPARED FOR:
HARBOR RETIREMENT ASSOCIATES
1440 HIGHWAY A1A
VERO BEACH, FLORIDA 32963

PREPARED BY:
CEMCON, Ltd.
Consulting Engineers, Land Surveyors & Planners
2280 White Oak Circle, Suite 100
Aurora, Illinois 60504-9675
Ph: 630.862.2100 Fax: 630.862.2199
E-Mail: cadd@cemcon.com Website: www.cemcon.com

REVISIONS

NO.	DATE	SHEETS	NO.	DATE	SHEETS

JOB NO. 814.003
COMPLETION DATE : OCTOBER 10, 2014
SHEET 1 OF 20

HARBORCHASE OF LONG GROVE - FINAL ENGINEERING - 814.003 - AS SUBMITTED: 10-10-14/JGC

CONSTRUCTION SPECIFICATIONS – GENERAL NOTES

PROTECTION OF WATERMAIN AND WATER SERVICE

WATERMAINS AND WATER SERVICE LINES SHALL BE PROTECTED FROM SANITARY SEWERS, STORM SEWERS, COMBINED SEWERS, HOUSE SEWER SERVICE CONNECTIONS AND DRAINS AS FOLLOWS:

a) WATERMAINS:

1.) HORIZONTAL SEPARATION:

A) WATERMAINS SHALL BE LAID AT LEAST TEN FEET HORIZONTALLY FROM ANY EXISTING OR PROPOSED DRAIN, STORM SEWER, SANITARY SEWER, COMBINED SEWER OR SEWER SERVICE CONNECTION.

B) WATERMAINS MAY BE LAID CLOSER THAN TEN FEET TO A SEWER LINE WHEN:

I) LOCAL CONDITIONS PREVENT A LATERAL SEPARATION OF TEN FEET; AND

II) THE WATERMAIN INVERT IS AT LEAST 18 INCHES ABOVE THE CROWN OF THE SEWER; AND

III) THE WATERMAIN IS EITHER IN A SEPARATE TRENCH OR IN THE SAME TRENCH ON AN UNDISTURBED EARTH SHELF LOCATED TO ONE SIDE OF THE SEWER.

C) BOTH THE WATERMAIN AND DRAIN OR SEWER SHALL BE CONSTRUCTED OF SLIP–ON OR MECHANICAL JOINT CAST OR DUCTILE IRON PIPE, PRESTRESSED CONCRETE PIPE (STORM SEWER ONLY), OR PVC PIPE MEETING THE REQUIREMENTS OF SECTION 653.111 OF THE I.E.P.A. TECHNICAL POLICY STATEMENTS, WHEN IT IS IMPOSSIBLE TO MEET (A) OR (B) ABOVE. THE DRAIN OR SEWER SHALL BE PRESSURE TESTED TO THE MAXIMUM EXPECTED SURCHARGE HEAD BEFORE BACKFILLING.

2.) VERTICAL SEPARATION:

A) A WATERMAIN SHALL BE LAID SO THAT ITS INVERT IS 18 INCHES ABOVE THE CROWN OF THE DRAIN OR SEWER WHENEVER WATERMAINS CROSS STORM SEWERS, SANITARY SEWERS OR SEWER SERVICE CONNECTIONS. THE VERTICAL SEPARATION SHALL BE MAINTAINED FOR THAT PORTION OF THE WATERMAIN LOCATED WITHIN TEN FEET HORIZONTALLY OF ANY SEWER OR DRAIN CROSSED. A LENGTH OF WATERMAIN PIPE SHALL BE CENTERED OVER THE SEWER TO BE CROSSED WITH JOINTS EQUIDISTANT FROM THE SEWER OR DRAIN.

B) THE DRAIN OR SEWER SHALL BE CONSTRUCTED OF SLIP–ON OR MECHANICAL JOINT CAST OR DUCTILE IRON PIPE, PRESTRESSED CONCRETE PIPE, (STORM SEWER ONLY), OR PVC PIPE MEETING THE REQUIREMENTS OF SECTION 653.111, OR THE DRAIN OR SEWER SHALL BE SLEEVED WITH STEEL PIPE OR CONSTRUCTED OF REINFORCED CONCRETE PIPE CONFORMING TO ASTM C–76 WITH GASKETED JOINTS CONFORMING TO ASTM C–361 (STORM SEWERS ONLY), FOR THE ENTIRE LENGTH OF STORM SEWER BETWEEN STRUCTURES WHEN STORM SEWER IS PERPENDICULAR TO WATERMAIN.

I) IT IS IMPOSSIBLE TO OBTAIN THE PROPER VERTICAL SEPARATION AS DESCRIBED IN (A) ABOVE; OR

II) THE WATERMAIN PASSES UNDER A SEWER OR DRAIN.

C) A VERTICAL SEPARATION OF 18 INCHES BETWEEN THE INVERT OF THE SEWER OR DRAIN AND THE CROWN OF THE WATERMAIN SHALL BE MAINTAINED WHERE A WATERMAIN CROSSES UNDER A SEWER. SUPPORT THE SEWER OR DRAIN LINES TO PREVENT SETTLING AND BREAKING THE WATERMAIN.

D) CONSTRUCTION SHALL EXTEND ON EACH SIDE OF THE CROSSING UNTIL THE NORMAL DISTANCE FROM THE WATER MAIN TO THE SEWER OR DRAIN LINE IS AT LEAST TEN FEET.

E) EXCEPT IN THE CASE OF DIRECT CONFLICT DO NOT LOWER WATERMAIN TO CLEAR OBSTRUCTIONS.

F) WHEN WATERMAIN CROSSES UNDER ANY SEWER FOLLOW THE "STANDARD SPECIFICATIONS FOR WATER AND SEWER CONSTRUCTION IN ILLINOIS" MAY 1996, FIFTH EDITION (SEE PAGE 162, DRAWING NUMBER 19).

b) WATER SERVICE LINES:

1) THE HORIZONTAL AND VERTICAL SEPARATION BETWEEN WATER SERVICE LINES AND ALL STORM SEWERS, SANITARY SEWER, COMBINED SEWERS OR ANY DRAIN OR SEWER SERVICE CONNECTION SHALL BE THE SAME AS WATER MAIN SEPARATION DESCRIBED IN (a) ABOVE.

2) WATER PIPE DESCRIBED IN (a) ABOVE SHALL BE USED FOR SEWER SERVICE LINES WHEN MINIMUM HORIZONTAL AND VERTICAL SEPARATION CANNOT BE MAINTAINED.

c) SPECIAL CONDITIONS – ALTERNATE SOLUTIONS SHALL BE PRESENTED TO THE AGENCY WHEN EXTREME TOPOGRAPHICAL, GEOLOGICAL OR EXISTING STRUCTURAL CONDITIONS MAKE STRICT COMPLIANCE WITH (a) AND (b) ABOVE TECHNICALLY AND ECONOMICALLY IMPRACTICAL. ALTERNATE SOLUTIONS WILL BE APPROVED PROVIDED WATERTIGHT CONSTRUCTION STRUCTURALLY EQUIVALENT TO APPROVED WATERMAIN MATERIAL IS PROPOSED.

d) WATERMAINS SHALL BE SEPARATED FROM SEPTIC TANKS, DISPOSAL FIELDS AND SEEPAGE BEDS BY A MINIMUM OF 25 FEET.

e) WATERMAINS AND WATER SERVICE LINES SHALL BE PROTECTED AGAINST ENTRANCE OF HYDROCARBONS THROUGH DIFFUSION THROUGH ANY MATERIAL USED IN CONSTRUCTION OF THE LINE.

SANITARY SEWER, STORM SEWER, WATERMAIN

1. ALL SANITARY SEWER AND WATERMAIN WORK SHALL BE CONSTRUCTED IN ACCORDANCE WITH THE VILLAGE OF LONG GROVE STANDARD SPECIFICATIONS AND THE APPLICABLE STANDARD SPECIFICATIONS FOR WATER AND SEWER MAIN CONSTRUCTION IN ILLINOIS, CURRENT EDITION.

2. WATERMAIN SERVICES SHALL HAVE A MINIMUM OF 5.0 FEET OF COVER AND SHALL BE RUN IN STRAIGHT ALIGNMENT UNLESS SPECIFICALLY SHOWN ON THE PLANS.

3. ALL EXISTING UTILITIES OR IMPROVEMENTS, INCLUDING WALKS, CURBS, PAVEMENT AND PARKWAYS DAMAGED OR REMOVED DURING CONSTRUCTION SHALL BE PROMPTLY RESTORED TO THEIR RESPECTIVE ORIGINAL CONDITION.

4. THE CONTRACTOR SHALL NOTIFY ALL UTILITY COMPANIES PRIOR TO CONSTRUCTION TO VERIFY IN THE FIELD ALL EXISTING AND UNDERGROUND UTILITIES ADJACENT TO THE PROJECT, AND BE RESPONSIBLE FOR PROTECTION OF SAME. THE CONTRACTOR SHALL ALSO NOTIFY THE VILLAGE OF LONG GROVE ENGINEERING DEPARTMENT AT LEAST 48 HOURS PRIOR TO START OF CONSTRUCTION.

5. ALL STORM MANHOLE, VALVE VAULT, OR CATCH BASIN ADJUSTMENT OF FRAMES SHALL BE MADE WITH PRECAST CONCRETE ADJUSTING RINGS SET IN PREFORMED BUTYL MASTIC RUB–R–NEK OR APPROVED EQUAL, AND NO MORE THAN 12" OF ADJUSTING RINGS WILL BE PERMITTED, 2 RINGS MAXIMUM, 2" MINIMUM RING SIZE.

6. ALL DRAINAGE STRUCTURES TO HAVE POURED INVERTS CONFORMING TO THE SHAPE OF THE PIPE.

7. THE CONTRACTOR SHALL BEWARE OF POTENTIAL CONFLICTS WITH EXISTING UTILITIES AS INDICATED ON THE PLANS. THE CONTRACTOR SHALL EXCAVATE AROUND UTILITIES TO DETERMINE ELEVATIONS BEFORE BEGINNING CONSTRUCTION.

8. "BAND–SEAL" OR SIMILAR COUPLINGS SHALL BE USED WHEN JOINING SEWER PIPES OF DISSIMILAR MATERIALS.

9. ALL NEW SANITARY SEWERS SHALL HAVE WYES FOR PROPOSED BUILDING SERVICES. ALL CONNECTIONS TO EXISTING SANITARY SEWERS NOT HAVING WYES SHALL BE MADE WITH A "SEWER TAP" FOR BUILDING SERVICES AND WITH A MANHOLE FOR SEWER EXTENSIONS. ALL TAPS SHALL INCLUDE A PROPERLY INSTALLED HUB WYE SADDLE.

10. ALL SANITARY SEWERS SHALL PASS INFILTRATION AND AIR TESTS AND DEFLECTION TESTING MEETING THE APPROVAL OF THE VILLAGE OF LONG GROVE.

11. AT THE COMPLETION OF THIS PROJECT ONE SET OF RECORD DRAWINGS IS TO BE SUBMITTED TO THE ENGINEER SHOWING THE LOCATION OF ALL OF THE SERVICES, PIPES, STRUCTURES, GRADING AND UTILITIES. A STATEMENT SHALL BE ATTACHED TO THE RECORD MYLAR DRAWINGS THAT "ALL CONSTRUCTION WAS IN SUBSTANTIAL CONFORMANCE WITH THE ENGINEERING PLANS AND SPECIFICATIONS." RECORD DRAWINGS MUST MEET THE REQUIREMENTS OF THE VILLAGE OF LONG GROVE.

12. ALL SANITARY SEWERS AND SANITARY SEWER SERVICES SHALL BE PVC SDR 21 OR 26 PIPE AS SHOWN ON THE PLANS (OR DUCTILE IRON WHEN SO NOTED) CONFORMING TO ASTM D–2241–00 WITH ELASTOMERIC JOINTS PER ASTM D–3139.

13. CONNECTIONS TO EXISTING SANITARY, STORM AND WATER SYSTEMS SHALL BE CONSIDERED INCIDENTAL TO THE CONTRACT.

14. ALL WATERMAINS SHALL BE CEMENT LINED DUCTILE IRON PIPE, CLASS 52 CONFORMING TO AWWA C–151 WITH PUSH–ON OR MECHANICAL JOINTS AND SHALL HAVE A MINIMUM OF 5.0 FEET OF COVER.

15. WATER SERVICES SHALL INCLUDE THE NECESSARY LENGTH OF TYPE "K" COPPER WATER TUBE OF THE SIZE SHOWN ON THE PLANS, CORPORATION STOP, CURB STOP, AND SERVICE BOX, ALL AS REQUIRED BY THE MUNICIPALITY, AND ALL NECESSARY LABOR, TOOLS, EQUIPMENT, EXCAVATION & BACKFILL, FOR A COMPLETE INSTALLATION AS SHOWN ON THE PLANS. TRENCH BACKFILL WILL BE PAID FOR SEPARATELY, WHEN REQUIRED.

16. SANITARY SEWER STRUCTURES SHALL BE ASSEMBLED AND ADJUSTED USING MASTIC MATERIAL SHOWN ON THE PLANS AND MEETING THE APPROVAL OF THE MUNICIPALITY.

17. FIRE HYDRANTS SHALL BE CONSTRUCTED PER THE VILLAGE OF LONG GROVE STANDARDS.

18. WATERMAINS SHALL BE SUBJECTED TO A HYDROSTATIC / LEAKAGE TEST AND DISINFECTED IN ACCORDANCE WITH LONG GROVE STANDARDS AND SPECIFICATIONS. TEST PRESSURE SHALL BE NO LESS THAN 150 psi FOR A PERIOD OF 4 HOURS AND NOT VARY BY MORE THAN ±5 psi DURING THE TEST. THE TEST GAUGE SHALL BE APPROVED BY THE VILLAGE AND SHALL BE GLYCERIN OR OIL FILLED, WITH A RANGE OF NOT MORE THAN 200 psi AND INCREMENTS NOT GREATER THAN 5 psi, 4" MINIMUM DIAL SIZE. WATER VELOCITY TEST SHALL BE EXPECTED AT THE END OF THE TEST PERIOD TO SHOW ACTUAL LEAKING AND THAT THE WATERMAIN DID NOT HAVE TO MUCH AIR IN THE TESTED SECTION.

19. GRANULAR TRENCH BACKFILL SHALL BE USED IN ALL LOCATIONS WHERE THE PROPOSED UNDERGROUND UTILITY IS TO BE CONSTRUCTED UNDER PERMANENT TYPE PAVEMENTS, DRIVEWAYS, OR SIDEWALKS; IN ANY UTILITY TRENCH OVER WHICH ANOTHER UTILITY WILL PASS; OR AS DIRECTED BY THE ENGINEER. TRENCH BACKFILL SHALL BE EXTENDED TWO (2) FEET ON EACH SIDE OF THE PERMANENT TYPE SURFACE.

20. ALL SANITARY SEWER SHALL BE CONSTRUCTED WITH STONE BEDDING IN ACCORDANCE WITH ASTM D–2321–89 CLASS IA. INTIAL BACKFILL SHALL BE A MINIMUM OF 12 INCHES.

21. THE COST OF PIPE BEDDING WILL NOT BE PAID FOR SEPARATELY BUT INCLUDED IN THE CONTRACT UNIT PRICES OF THE VARIOUS SEWER ITEMS.

22. ALL WATER SERVICE LINE CONNECTIONS TO EXISTING WATER MAINS SHALL BE PRESSURE TAPS IN ACCORDANCE WITH THE VILLAGE OF LONG GROVE STANDARDS.

SANITARY SEWER, STORM SEWER, WATERMAIN (CONT'D.)

23. NEW WATERMAIN VALVES, INCLUDING PRESSURE TAP VALVES, ADJACENT TO AN EXISTING WATERMAIN, AND EXISTING WATERMAIN VALVES SHALL ONLY BE OPERATED BY THE VILLAGE OF LONG GROVE DEPARTMENT OF PUBLIC WORKS PERSONNEL WITH 48–HOUR NOTICE (MONDAY–FRIDAY).

24. TREES SHALL BE INSTALLED A MINIMUM OF FIVE (5) FEET HORIZONTALLY FROM SANITARY SEWERS, SANITARY SERVICES, WATERMAINS, AND WATER SERVICES. TREES SHALL BE INSTALLED A MINIMUM OF TEN (10) FEET HORIZONTALLY FROM UTILITY STRUCTURES AND APPURTENANCES, INCLUDING BUT NOT LIMITED TO MANHOLES, VALVE VAULTS, VALVE BOXES AND FIRE HYDRANTS.

25. THE EXISTING WELL AND SEPTIC TANK MUST BE CAPPED (WELL), FILLED AND ABANDONED IN ACCORDANCE WITH LAKE COUNTY AND ILLINOIS DEPARTMENT OF HEALTH REGULATIONS.

26. DEFLECTION TESTING OF SANITARY SEWER SHALL BE PERFORMED IN ACCORDANCE WITH "STANDARD SPECIFICATIONS FOR WATER AND SEWER MAIN CONSTRUCTION IN ILLINOIS".

27. ALL RETAINER GLANDS WHEN REQUIRED TO RESTRAIN VALVES, FITTINGS, HYDRANTS, AND PIPE JOINTS SHALL BE MECHANICAL JOINT WEDGE ACTION TYPE MEGALUG 1100 SERIES AS MANUFACTURED BY EBBA IRON, INC. OR UNI–FLANGE BLOCKBUSTER 1400 SERIES AS MANUFACTURED BY FORD METER BOX CO. AND SHALL BE FOR USE ON DUCTILE IRON PIPE CONFORMING TO ANSI/AWWA C151/A21.51, FOR NOMINAL PIPE SIZES 3" THROUGH 48".

28. DEFLECTION TESTING FOR FLEXIBLE THERMOPLASTIC PIPE:

A.) THE PIPELINE SHALL BE TESTED FOR EXCESS DEFLECTION BY PULLING A "GO–NO GO" MANDREL THROUGH THE PIPE FROM MANHOLE TO MANHOLE. THE MANDREL SHALL BE SIZED IN ACCORDANCE WITH SECTION 31–1.11 C (4), AND AS SPECIFIED IN THE SPECIAL PROVISIONS. A "DEFLECTOMETER" MAY ALSO BE USED TO CHECK AND RECORD DEFLECTION.

B.) WHEREVER POSSIBLE AND PRACTICAL, THE TESTING SHALL INITIATE AT THE DOWNSTREAM LINES AND PROCEED TOWARDS THE UPSTREAM LINES.

C.) WHERE DEFLECTION IS FOUND TO BE IN EXCESS OF ALLOWABLE TESTING LIMITS, THE CONTRACTOR SHALL EXCAVATE TO THE POINT OF EXCESS DEFLECTION AND CAREFULLY COMPACT AROUND THE POINT WHERE EXCESS DEFLECTION WAS FOUND. THE LINE SHALL THEN BE RETESTED FOR DEFLECTION. HOWEVER, SHOULD AFTER THE INITIAL TESTING THE DEFLECTED PIPE FAIL TO RETURN TO THE ORIGINAL SIZE (INSIDE DIAMETER), THE LINE SHALL BE REPLACED.

29. DEFLECTION LIMITS FOR FLEXIBLE THERMOPLASTIC PIPE:

A.) DEFLECTION OF POLYVINYL CHLORIDE (PVC) PIPE SHALL NOT EXCEED 5.0% OF THE "BASE I.D." (INTERNAL DIAMETER) OF THE PIPE. "BASE I.D." SHALL BE CALCULATED IN ACCORDANCE WITH THE FOLLOWING:

AVG ID =AVG OD – 2 (1.06)t
TOLERANCE PACKAGE = $(A^2 + B^2 + B^2 + C^2)1/2$
WHERE:
A = OD TOLERANCE (ASTM D3034)
B = EXCESS WALL THICKNESS TOLERANCE = 0.06t
C = OUT–OF–ROUNDNESS TOLERANCE = 0.15(AVG OD)
t = MINIMUM WALL THICKNESS (ASTM D–2241)

BASE ID = AVG. ID – TOLERANCE PACKAGE

30. HYDRANTS SHALL BE PAINTED WITH TNEMEC HIGH GLOSS SAFETY ORANGE #E0119 PRIOR TO THE HYDRANTS BEING PLACED IN SERVICE.

31. ALL CHAINS AND CHAIN HOOKS MUST BE REMOVED FROM THE HYDRANTS PRIOR TO THE HYDRANTS BEING PLACED IN SERVICE.

32. THE CONTRACTOR SHALL ROTATE AND/OR ADJUST ANY EXISTING AND/OR NEW HYDRANT TO THE SATISFACTION OF THE DEPARTMENT OF PUBLIC UTILITIES.

33. ALL WATERMAIN JOINTS SHALL BE RESTRAINED WITH MEG–A–LUG RETAINER GLANDS OR APPROVED EQUAL FOR A DISTANCE OF 20 FEET FROM THE PROPOSED VALVE VAULT ON THE LIVE SIDE TO THE STUB END.

34. <u>VACUUM TESTING:</u>

VACUUM TESTING SHALL BE CARRIED OUT IMMEDIATELY AFTER ASSEMBLY AND PRIOR TO BACKFILLING OF MANHOLES THAT ARE UP TO SEVENTY–TWO (72) INCHES IN DIAMETER. THIS TESTING SHALL BE COMPLETED BEFORE BACKFILLING SO THAT ANY LEAKS CAN BE FOUND AND FIXED EXTERNALLY. ALL LIFT HOLES SHALL BE PLUGGED WITH A NON–SHRINK GROUT, OR RUBBER PLUG. THE MANHOLE FRAME AND ADJUSTING RINGS SHALL BE SET TO PROPOSED GRADE AND BE IN PLACE BEFORE TESTING. ANY CHIMNEY SEAL INSTALLED BY THE CONTRACTOR SHALL BE AN EXTERIOR TYPE, NO INTERIOR CHIMNEY SEALS ALLOWED. NO GROUT SHALL BE PLACED IN THE HORIZONTAL JOINTS. STUBOUTS, MANHOLE BOOTS AND PIPE PLUGS SHALL BE SECURED TO PREVENT MOVEMENT WHILE THE VACUUM IS DRAWN. VACUUM TESTING SHALL TEST ALL MANHOLES FOR LEAKAGE. A VACUUM OF TEN (10) INCHES OF MERCURY SHALL BE PLACED ON THE MANHOLE AND THE TIME MEASURED FOR THE VACUUM TO DROP TO NINE (9) INCHES OF MERCURY. THE VACUUM SHALL NOT DROP BELOW NINE (9) INCHES OF MERCURY FOR THE FOLLOWING TIME PERIODS FOR EACH SIZE MANHOLE:

FORTY–EIGHT (48) INCHES DIAMETER – SIXTY (60) SECONDS
SIXTY (60) INCHES DIAMETER – SEVENTY–FIVE (75) SECONDS
SEVENTY–TWO (72) INCHES DIAMETER – NINETY (90) SECONDS

35. STAINLESS STEEL NUTS, BOLTS/T–BOLTS, AND WASHERS, TYPE 304 OR BETTER, WILL BE REQUIRED ON ALL WATER MAIN INSTALLATIONS. THIS WOULD APPLY TO HYDRANTS, TAPPING SLEEVES, VALVE, FITTINGS, RESTRAINT, AND OTHER APPURTENANCES BURIED OR IN VALVE VAULTS. MECHANICAL JOINTS AND RESTRAINT GLANDS REQUIRE 304 STAINLESS STEEL T–BOLTS. AN ANTI–SEIZE COMPOUND SHALL BE FACTORY APPLIED TO NUTS OR BOLTS – ANY DAMAGE TO THIS COATING SHALL BE REPAIRED WITH FIELD APPLIED APPROVED ANTI–SEIZE COMPOUND THAT IS A MOLYBDENUM–BASE LUBRICANT, BOSTIK NEVER–SEEZ OR APPROVED EQUAL.

Copyright © 2014 Cemcon, Ltd. All rights reserved.

PREPARED FOR:
HARBOR RETIREMENT ASSOCIATES
1440 HIGHWAY A1A
VERO BEACH, FLORIDA 32963

PREPARED BY:
CEMCON, Ltd.
Consulting Engineers, Land Surveyors & Planners
2280 White Oak Circle, Suite 100
Aurora, Illinois 60502–9575
Ph: 630.862.2100 Fax: 630.862.2199
E–Mail: cadd@cemcon.com Website: www.cemcon.com

REVISIONS

NO.	DATE	DESCRIPTION	NO.	DATE	DESCRIPTION

CONSTRUCTION SPECIFICATIONS – GENERAL NOTES

HARBORCHASE OF LONG GROVE

FILE NAME: GENNOTES	DSGN. BY: KMM	JOB NO.: 814.003	FLD. BK./PG.: ---	SHEET NO.
DIR: 814003	DRN. BY: JGC	DATE: 10–10–14	SCALE: 1" = ---	2 of 20

PLOT FILE CREATED: 10/9/2014 10:57 AM BY JEFF CEBULA DRAWING LAST SAVED: 10/8/2014 2:10 PM BY JEFF DRAWING PATH: P:\814003\DWG\ENG\DRAWINGS\FINAL DRAFTING\GENNOTES.DWG

CONSTRUCTION SPECIFICATIONS – GENERAL NOTES

GENERAL

1. THE CONTRACTOR SHALL BE RESPONSIBLE FOR PROVIDING SAFE AND HEALTHFUL WORKING CONDITIONS THROUGHOUT THE CONSTRUCTION OF THE PROPOSED IMPROVEMENTS.

2. THE CONTRACTOR SHALL BE RESPONSIBLE FOR NOTIFYING EACH OF THE UTILITY COMPANIES BEFORE ANY WORK IS STARTED. ALL UTILITIES MUST BE STAKED PRIOR TO CONSTRUCTION.

3. THE ENGINEER WILL BE GIVEN SEVENTY-TWO (72) HOURS NOTICE FOR ANY STAKING THAT IS TO BE DONE. EACH OF THE VARIOUS ITEMS OF WORK COVERED BY THIS CONTRACT WILL BE STAKED ONCE. ADDITIONAL STAKING REQUIRED DUE TO THE CONTRACTOR NEGLIGENCE SHALL BE PAID FOR BY THE CONTRACTOR AT THE CURRENT HOURLY RATE.

4. THE CONTRACTOR SHALL INFORM THE VILLAGE OF LONG GROVE ENGINEERING DEPARTMENT BEFORE WORK COMMENCES ON EACH CATEGORY OF CONSTRUCTION, I.E. WATERMAIN, SANITARY, STREET AND DRAINAGE IMPROVEMENT. A FORTY EIGHT (48)HOUR NOTICE SHALL BE GIVEN FOR ANY ITEM THAT REQUIRE FINAL TESTING AND INSPECTION SUCH AS WATERMAINS OR SANITARY SEWERS.

5. THE CONTRACTOR RESPONSIBLE FOR WATERMAIN CONSTRUCTION, SANITARY SEWER CONSTRUCTION AND DRAINAGE IMPROVEMENTS (UNDERGROUND WORK) SHALL DISPOSE OF ALL SURPLUS MATERIALS ON THE SITE AS DIRECTED BY THE ENGINEER. NO ADDITIONAL COMPENSATION WILL BE PAID AND SAID WORK SHALL BE INCIDENTAL TO THE OTHER ITEMS OF CONSTRUCTION.

6. THE OWNER WILL FURNISH THE CONTRACTOR WITH LINES AND GRADES NECESSARY TO THE PROPER EXECUTION AND CONTROL OF THE WORK. THE CONTRACTOR SHALL CALL THE ATTENTION OF THE OWNER'S REPRESENTATIVE TO ANY ERRORS OR DISCREPANCIES WHICH MAY BE SUSPECTED IN LINES AND GRADES WHICH ARE ESTABLISHED BY THE OWNER, AND SHALL NOT PROCEED WITH THE WORK UNTIL ANY LINES AND GRADES WHICH ARE BELIEVED TO BE IN ERROR HAVE BEEN VERIFIED OR CORRECTED BY THE OWNER'S REPRESENTATIVE.

7. THE UNDERGROUND CONTRACTOR SHALL BE RESPONSIBLE TO PLACE ON GRADE AND COORDINATE WITH OTHER CONTRACTORS ALL UNDERGROUND STRUCTURE FRAMES SUCH AS CATCH BASINS, INLETS, MANHOLES, HYDRANTS, BUFFALO BOXES, VALVES, ETC. NO ADDITIONAL COMPENSATION WILL BE PAID AND SAID ADJUSTMENTS SHALL BE CONSIDERED INCIDENTAL TO OTHER ITEMS OF CONSTRUCTION.

8. CONTRACTORS PERFORMING WORK WITHIN THE R.O.W. MUST SECURE A LAKE COUNTY R.O.W. PERMIT.

9. THE CONTRACTOR SHALL BE RESPONSIBLE FOR VERIFYING EXISTING CONDITIONS (INCLUDING UTIITY LOCATIONS) PRIOR TO THE INSTALLATION OR FABRICATION OF ANY MATERIALS. REPORT ANY DISCREPANCIES IMMEDIATELY TO THE ENGINEER

TRAFFIC CONTROL AND PROTECTION

1. ALL WORK CONDUCTED WITHIN PUBLIC RIGHT-OF-WAYS SHALL BE GOVERNED BY THE FOLLOWING SPECIFICATIONS FOR TRAFFIC CONTROL. TRAFFIC CONTROL SHALL BE IN ACCORDANCE WITH THE "STANDARD SPECIFICATIONS FOR ROAD AND BRIDGE CONSTRUCTION" ADOPTED JANUARY 1, 2012, THE MILLENNIUM EDITION OF "ILLINOIS MANUAL ON UNIFORM TRAFFIC CONTROL DEVICES FOR STREETS AND HIGHWAYS" AND SPECIAL DETAILS OF ILLINOIS HIGHWAY STANDARDS LISTED HEREIN.

2. SPECIAL ATTENTION IS CALLED TO ARTICLES 107.09 AND 107.14 OF THE STANDARD SPECIFICATIONS AND THE FOLLOWING HIGHWAY STANDARDS, DETAILS AND SUPPLEMENTAL SPECIFICATIONS AND MIMEOGRAPHED SPECIAL PROVISIONS CONTAINED HEREIN, RELATING TO TRAFFIC CONTROL.

3. THE CONTRACTOR SHALL CONTACT THE VILLAGE OF LONG GROVE DEPARTMENT OF PUBLIC WORKS AT LEAST SEVENTY-TWO (72) HOURS BEFORE WORK COMMENCES.

4. STANDARDS
   701501
   701601
   701701
   701801

5. AT THE PRECONSTRUCTION MEETING THE CONTRACTOR SHALL FURNISH THE NAME OF THE INDIVIDUAL IN HIS DIRECT EMPLOY WHO IS TO BE RESPONSIBLE FOR THE INSTALLATION AND MAINTENANCE OF THE TRAFFIC CONTROL FOR THIS PROJECT. IF THE ACTUAL INSTALLATION AND MAINTENANCE ARE TO BE ACCOMPLISHED BY A SUBCONTRACTOR, CONSENT SHALL BE REQUESTED OF THE ENGINEER AT THE TIME OF THE PRECONSTRUCTION MEETING IN ACCORDANCE WITH ARTICLE 108.01 OF THE STANDARD SPECIFICATIONS. THIS SHALL NOT RELIEVE THE CONTRACTOR OF THE FOREGOING REQUIREMENT FOR A RESPONSIBLE INDIVIDUAL IN HIS DIRECT EMPLOY TO SUPERVISE THIS WORK. THE CONTRACTOR WILL PROVIDE THE NAME OF ITS REPRESENTATIVE WHO WILL BE RESPONSIBLE FOR THE ADMINISTRATION OF THE TRAFFIC CONTROL PLAN.

6. THIS ITEM OF WORK SHALL INCLUDE FURNISHING, INSTALLING, MAINTAINING, RELOCATING AND REMOVING ALL TRAFFIC CONTROL DEVICES USED FOR THE PURPOSE OF REGULATING, WARNING OR DIRECTING TRAFFIC DURING THE CONSTRUCTION OR MAINTENANCE OF THIS IMPROVEMENT.

7. TRAFFIC CONTROL AND PROTECTION SHALL BE PROVIDED AS CALLED FOR IN THE PLANS, THESE SPECIAL PROVISIONS, APPLICABLE HIGHWAY STANDARDS, APPLICABLE SECTIONS OF THE STANDARD SPECIFICATIONS, OR AS DIRECTED BY THE ENGINEER.

8. THE FOLLOWING TRAFFIC CONTROL REQUIREMENTS ARE OF SPECIAL IMPORTANCE. CONFORMANCE TO THESE REQUIREMENTS, HOWEVER, SHALL NOT RELIEVE THE CONTRACTOR FROM CONFORMING TO ALL OTHER APPLICABLE REQUIREMENTS OF THE STANDARD SPECIFICATIONS FOR ROAD AND BRIDGE CONSTRUCTION.

9. THE GOVERNING FACTOR IN THE EXECUTION AND STAGING OF WORK FOR THIS PROJECT IS TO PROVIDE THE MOTORING PUBLIC WITH THE SAFEST POSSIBLE TRAVEL CONDITIONS ALONG THE ROADWAY THROUGH THIS CONSTRUCTION ZONE. THE CONTRACTOR SHALL SO ARRANGE HIS OPERATION AS TO KEEP THE CLOSING OF ANY LANE OF THE ROADWAY TO A MINIMUM.

10. ALL TRAFFIC CONTROL DEVICES USED ON THIS PROJECT SHALL CONFORM TO THE PLANS, SPECIAL PROVISIONS, TRAFFIC CONTROL STANDARDS, "STANDARD SPECIFICATIONS FOR TRAFFIC CONTROL DEVICES" AND THE "ILLINOIS MANUAL ON UNIFORM TRAFFIC CONTROL DEVICES FOR STREETS AND HIGHWAYS". NO MODIFICATION OF THESE REQUIREMENTS WILL BE ALLOWED WITHOUT PRIOR WRITTEN APPROVAL OF THE ENGINEER.

11. TRAFFIC CONTROL DEVICES INCLUDE: SIGNS AND THEIR SUPPORTS, SIGNALS, PAVEMENT MARKINGS, BARRICADES WITH SAND BAGS, CHANNELIZING DEVICES, WARNING LIGHTS, ARROWBOARDS, FLAGGERS, OR ANY OTHER DEVICE USED FOR THE PURPOSE OF REGULATING, WARNING, OR GUIDING TRAFFIC THROUGH THE CONSTRUCTION ZONE.

12. THE CONTRACTOR SHALL BE RESPONSIBLE FOR THE PROPER LOCATION, INSTALLATION, AND ARRANGEMENT OF ALL TRAFFIC CONTROL DEVICES. SPECIAL ATTENTION SHALL BE GIVEN TO ADVANCE WARNING SIGNS DURING CONSTRUCTION OPERATIONS IN ORDER TO KEEP LANE ASSIGNMENT CONSISTENT WITH BARRICADE PLACEMENT AT ALL TIMES. THE CONTRACTOR SHALL COVER ALL TRAFFIC CONTROL DEVICES WHICH ARE INCONSISTENT WITH DETOUR OR LANE ASSIGNMENT PATTERNS DURING THE TRANSITION FROM ONE CONSTRUCTION STAGE TO ANOTHER.

13. CONSTRUCTION SIGNS REFERRING TO DAYTIME LANE CLOSURE DURING WORKING HOURS SHALL BE REMOVED OR COVERED DURING NON-WORKING HOURS.

14. THE CONTRACTOR SHALL COORDINATE ALL TRAFFIC CONTROL WORK ON THIS PROJECT WITH ADJOINING OR OVERLAPPING PROJECTS, INCLUDING BARRICADE PLACEMENT NECESSARY TO PROVIDE A UNIFORM TRAFFIC DETOUR PATTERN. WHEN DIRECTED BY THE ENGINEER, THE CONTRACTOR SHALL REMOVE ALL TRAFFIC CONTROL DEVICES WHICH WERE FURNISHED, INSTALLED AND MAINTAINED BY HIM UNDER THIS CONTRACT, AND SUCH DEVICES SHALL REMAIN THE PROPERTY OF THE CONTRACTOR. ALL TRAFFIC CONTROL DEVICES SHALL REMAIN IN PLACE UNTIL SPECIFIC AUTHORIZATION FOR RELOCATION OR REMOVAL IS RECEIVED FROM THE ENGINEER.

15. THE CONTRACTOR SHALL ENSURE THAT ALL TRAFFIC CONTROL DEVICES INSTALLED BY HIM ARE OPERATIONAL 24 HOURS A DAY, INCLUDING SUNDAYS AND HOLIDAYS.

TRAFFIC CONTROL AND PROTECTION (CONT'D.)

16. THE CONTRACTOR SHALL PROVIDE A MANNED TELEPHONE ON A CONTINUOUS 24-HOUR-A-DAY BASIS TO RECEIVE NOTIFICATION OF ANY DEFICIENCIES REGARDING TRAFFIC CONTROL AND PROTECTION AND SHALL DISPATCH WORKERS, MATERIALS AND EQUIPMENT TO CORRECT ANY SUCH DEFICIENCIES. THE CONTRACTOR SHALL RESPOND TO ANY CALL FROM THE VILLAGE OF LONG GROVE CONCERNING ANY REQUEST FOR IMPROVING OR CORRECTING TRAFFIC CONTROL DEVICES AND BEGIN MAKING THE REQUESTED REPAIRS WITHIN TWO HOURS FROM THE TIME OF NOTIFICATIONS.

17. WHEN TRAVELING IN LANES OPEN TO PUBLIC TRAFFIC, THE CONTRACTOR'S VEHICLES SHALL ALWAYS MOVE WITH AND NOT AGAINST OR ACROSS THE FLOW OF TRAFFIC. THESE VEHICLES SHALL ENTER OR LEAVE WORK AREAS IN A MANNER WHICH WILL NOT BE HAZARDOUS TO, OR INTERFERE WITH, TRAFFIC AND SHALL NOT PARK OR STOP EXCEPT WITHIN DESIGNATED WORK AREAS. PERSONAL VEHICLES SHALL NOT PARK WITHIN THE RIGHT- OF-WAY EXCEPT IN SPECIFIC AREAS DESIGNATED BY THE ENGINEER.

18. ANY DROP OFF GREATER THAN THREE INCHES, BUT LESS THAN SIX INCHES WITHIN EIGHT FEET OF THE PAVEMENT EDGE SHALL BE PROTECTED BY TYPE I OR II BARRICADES EQUIPPED WITH MONO-DIRECTIONAL STEADY BURN LIGHTS AT 100 FOOT CENTER TO CENTER SPACING. IF THE DROP OFF WITHIN EIGHT FEET OF THE PAVEMENT EDGE EXCEEDS SIX INCHES, THE BARRICADES MENTIONED ABOVE SHALL BE PLACED AT 50 FOOT CENTER TO CENTER SPACING. BARRICADES THAT MUST BE PLACED IN EXCAVATED AREAS SHALL HAVE LEG EXTENSIONS INSTALLED SUCH THAT THE TOP OF THE BARRICADE IS IN COMPLIANCE WITH THE HEIGHT REQUIREMENTS OF STANDARD 2299. VERTICAL PANELS OR OTHER DELINEATING DEVICES MAY BE SUBSTITUTED FOR TYPE I OR II BARRICADES WITH THE APPROVAL OF THE ENGINEER.

19. CHECK BARRICADES SHALL BE PLACED IN WORK AREAS PERPENDICULAR TO TRAFFIC EVERY 100 FEET, ONE (1) PER LANE AND SHOULDER, TO PREVENT MOTORISTS FROM USING WORK AREAS AS A TRAVELED WAY. ADDITIONAL CHECK BARRICADES SHALL BE PLACED IN ADVANCE OF ANY HAZARD IN THE WORK AREAS WHICH WOULD ENDANGER A MOTORIST. CHECK BARRICADES SHALL BE TYPE I OR II AND EQUIPPED WITH A FLASHING LIGHT.

20. PLACEMENT OF ALL SIGNS AND BARRICADES SHALL PROCEED IN THE DIRECTION OF FLOW OF TRAFFIC. REMOVAL OF ALL SIGNS AND BARRICADES SHALL START AT THE END OF THE CONSTRUCTION AREAS AND PROCEED TOWARD ONCOMING TRAFFIC UNLESS OTHERWISE DIRECTED BY THE ENGINEER.

21. DELAYS TO THE CONTRACTOR CAUSED BY COMPLYING WITH THESE REQUIREMENTS WILL BE CONSIDERED INCIDENTAL TO THE ITEM FOR TRAFFIC CONTROL AND PROTECTION, AND NO ADDITIONAL COMPENSATION WILL BE ALLOWED.

22. THIS ITEM OR WORK WILL BE MEASURED ON A LUMP SUM BASIS FOR FURNISHING, INSTALLING, MAINTAINING, RELOCATING AND REMOVING THE TRAFFIC CONTROL DEVICES REQUIRED IN THE PLANS AND THESE SPECIAL PROVISIONS.

23. ANY LANE CLOSURES (IF NECESSARY) ON PUBLIC STREETS MUST BE COORDINATED WITH THE VILLAGE STAFF.

24. IF DEEMED NECESSARY TO TEMPORARILY CLOSE A PUBLIC SIDEWALK FOR SAFETY PURPOSES, "SIDEWALK CLOSED" SIGNS MUST BE PLACED WITH POSITIVE DIRECTION TO PEDESTRIANS.

EARTHWORK AND GRADING

1. WORK UNDER THIS SECTION SHALL INCLUDE BUT NOT BE LIMITED TO THE FOLLOWING:

   A. CLEARING AND REMOVAL OF ALL UNDESIRABLE TREES AND OTHER VEGETATIVE GROWTH WITHIN THE CONSTRUCTION AREA. TREE REMOVAL SHALL BE DESIGNATED BY THE OWNER AND SHALL BE KEPT TO A MINIMUM.

   B. STRIPPING OF TOPSOIL FROM ALL PROPOSED STREET, DRIVEWAY, PARKING LOT, RIGHT-OF-WAY, BUILDING PAD AND OTHER DESIGNATED STRUCTURAL AREAS.

   C. STOCKPILING OF TOPSOIL AT LOCATIONS AS DIRECTED BY THE OWNER. TOPSOIL STOCKPILED FOR FUTURE USE SHALL BE RELATIVELY FREE FROM LARGE ROOTS, STICKS, WEEDS, BRUSH, STONES LARGER THAN ONE (1) INCH DIAMETER, OR OTHER LITTER AND WASTE PRODUCTS INCLUDING EXTRANEOUS MATERIALS NOT CONDUCIVE TO PLANT GROWTH. TOPSOIL SHALL BE STOCKPILED IN SEQUENCE TO ELIMINATE ANY REHANDLING OR DOUBLE MOVEMENTS BY THE CONTRACTOR. FAILURE TO PROPERLY SEQUENCE THE STOCKPILING OPERATIONS SHALL NOT CONSTITUTE A CLAIM FOR ADDITIONAL COMPENSATION. NO MATERIAL SHALL BE STOCKPILED IN FRONT YARDS, OVERLAND DRAINAGE SWALES (FLOOD ROUTING AREAS), IN PROPOSED UTILITY LOCATIONS, IN UTILITY EASEMENTS OR IN THE RIGHT-OF-WAY.

   D. REMOVAL OF UNSUITABLE MATERIALS AS SPECIFIED FROM PROPOSED ROADWAY, DRIVEWAY/PARKING, BUILDING PAD AND OTHER DESIGNATED AREAS.

   E. CLAY CUT AND CLAY FILL WITH COMPACTION WITHIN PROPOSED ROADWAY, DRIVEWAY/PARKING, BUILDING PAD AND OTHER DESIGNATED AREAS.

   F. EXCAVATION AND GRADING OF THE OPEN SPACE, AND/OR YARD AREAS PER PLAN INCLUDING CONSTRUCTION OF BERMS, ETC.

   G. PLACEMENT AND COMPACTION OF STRUCTURAL MATERIAL TO THE DESIGN SUBGRADE ELEVATIONS AS REQUIRED BY THE STANDARDS AND DETAILS ON THE CONSTRUCTION PLANS. THE CONTRACTOR WILL NOTE THAT THE ELEVATIONS SHOWN ON THE CONSTRUCTION PLANS ARE FINISHED GRADE ELEVATIONS AND THAT PAVEMENT AND/OR TOPSOIL REPLACEMENT THICKNESS MUST BE SUBTRACTED TO DETERMINE SUBGRADE ELEVATIONS.

   H. IF REQUIRED, BORROW PIT EXCAVATION OF STRUCTURAL MATERIAL AND REFILL OF PIT WITH NON-STRUCTURAL MATERIAL.

   I. PLACEMENT AND COMPACTION OF NON-STRUCTURAL FILLS.

   J. MOVEMENT AND COMPACTION OF SPOIL MATERIAL FROM THE CONSTRUCTION OF UNDERGROUND UTILITIES.

   K. BACKFILLING OF CURBS AND/OR PAVEMENT AND SIDEWALK AFTER INSTALLATION OF SAME BY THE PAVING CONTRACTOR.

   L. FINAL SHAPING AND TRIMMING TO THE LINES, GRADES, AND CROSS-SECTIONS SHOWN IN THESE PLANS; AND TOPSOIL PLACEMENT TO DESIGN FINISHED GRADE ELEVATIONS.

   M. SOIL EROSION CONTROL MEASURES IN ACCORDANCE WITH THE APPLICABLE SPECIFICATIONS.

2. THE CONTRACTOR SHALL FAMILIARIZE HIMSELF WITH THE PLANS AND SHALL NOTIFY THE ENGINEER AT ONCE OF ANY DISCREPANCIES. THE CONTRACTOR SHALL EXAMINE THE DRAINAGE PATTERNS SHOWN ON THE PLANS AND MAKE CERTAIN THAT ALL GUTTER FLAGS AND PAVEMENTS ARE PITCHED PROPERLY TO ACHIEVE THIS DRAINAGE PATTERN.

3. MATERIALS TESTING, IF REQUIRED BY THE MUNICIPALITY, SHALL BE PROVIDED BY THE CONTRACTOR. THIS ITEM WILL NOT BE PAID FOR SEPARATELY BUT INCLUDED IN THE VARIOUS ITEMS OF WORK.

4. DURING CONSTRUCTION OPERATIONS THE CONTRACTOR SHALL INSURE POSITIVE SITE DRAINAGE AT THE CONCLUSION OF EACH DAY. SITE DRAINAGE MAY BE ACHIEVED BY DITCHING, PUMPING OR ANY OTHER ACCEPTABLE METHOD. THE CONTRACTOR'S FAILURE TO PROVIDE THE ABOVE WILL PRECLUDE ANY POSSIBLE ADDED COMPENSATION REQUESTED DUE TO DELAYS OR UNSUITABLE MATERIAL CREATED AS A RESULT THEREOF.

5. IT SHALL BE THE RESPONSIBILITY OF EACH RESPECTIVE CONTRACTOR TO REMOVE FROM THE SITE ANY AND ALL MATERIALS AND DEBRIS WHICH RESULT FROM HIS CONSTRUCTION OPERATIONS AT NO ADDITIONAL EXPENSE TO THE OWNER.

6. THE GRADING OPERATIONS ARE TO BE CLOSELY SUPERVISED AND INSPECTED, PARTICULARLY DURING THE REMOVAL OF UNSUITABLE MATERIAL AND THE CONSTRUCTION OF EMBANKMENTS OR BUILDING PADS, BY THE SOILS ENGINEER OR HIS REPRESENTATIVE. ALL TESTING, INSPECTION AND SUPERVISION OF SOIL QUALITY, UNSUITABLE REMOVAL AND ITS REPLACEMENT AND OTHER SOILS RELATED OPERATIONS SHALL BE ENTIRELY THE RESPONSIBILITY OF THE SOILS ENGINEER. NO UNDERCUT SHALL BE PERFORMED WITHOUT AUTHORIZATION FROM OWNER AND ASSIGNMENT OF AN EWO NUMBER.

7. THE PROPOSED GRADING ELEVATIONS SHOWN ON THE PLANS ARE FINISH GRADE. A MINIMUM OF SIX INCHES (6") OF TOPSOIL IS TO BE PLACED BEFORE FINISH GRADE ELEVATIONS ARE ACHIEVED.

8. THE SELECTED STRUCTURAL FILL MATERIAL SHALL BE PLACED IN LEVEL UNIFORM LAYERS SO THAT THE COMPACTED THICKNESS IS APPROXIMATELY SIX INCHES (6"); IF COMPACTION EQUIPMENT DEMONSTRATES THE ABILITY TO COMPACT GREATER THICKNESSES, THEN A GREATER THICKNESS MAY BE SPECIFIED. EACH LAYER SHALL BE THOROUGHLY MIXED DURING SPREADING TO INSURE UNIFORMITY.

9. EMBANKMENT MATERIAL WITHIN ROADWAY, DRIVEWAY, PARKING LOT AND OTHER STRUCTURAL CLAY FILL AREAS SHALL BE COMPACTED TO A MINIMUM OF NINETY-THREE PERCENT (93%) OF MAXIMUM DENSITY IN ACCORDANCE WITH ASTM SPECIFICATION D-1557 (MODIFIED PROCTOR METHOD), OR TO SUCH OTHER DENSITY AS MAY BE DETERMINED APPROPRIATE BY THE SOILS ENGINEER. EMBANKMENT MATERIAL FOR BUILDING PADS SHALL BE COMPACTED TO A MINIMUM OF NINETY-FIVE PERCENT (95%) OF MAXIMUM DENSITY IN ACCORDANCE WITH ASTM DESIGNATION D-1557 (MODIFIED PROCTOR METHOD) OR TO SUCH OTHER DENSITY AS MAY BE DETERMINED APPROPRIATE BY THE SOILS ENGINEER.

10. THE SURFACE VEGETATION, TOPSOIL AND ANY OBVIOUSLY SOFT UNDERLYING SOIL SHOULD BE STRIPPED FROM ALL AREAS TO RECEIVE STRUCTURAL FILL. IF THE UNDERLYING SUBGRADE SOILS RUT DEEPER THAN ONE INCH UNDER THE CONSTRUCTION EQUIPMENT OR IF THE MOISTURE CONTENT EXCEEDS THAT NEEDED FOR PROPER COMPACTION, THE SOIL SHALL BE SCARIFIED, DRIED AND RECOMPACTED TO THE REQUIRED SPECIFICATIONS (SEE SECTION 301 OF THE IDOT SPECIFICATIONS).

EARTHWORK AND GRADING (CONT'D.)

11. COMPLETED GRADING (FINISHED FINE GRADE) FOR PROPOSED PAVEMENT SUBGRADE AREAS, BUILDING PADS, AND YARD/OPEN SPACE AREAS SHALL BE WITHIN A TOLERANCE OF PLUS OR MINUS ONE-TENTH OF A FOOT (0.1') OF DESIGN SUBGRADE ELEVATIONS.

12. THE SUBGRADE FOR PROPOSED STREET AND PAVEMENT AREAS SHALL BE PROOF-ROLLED BY THE CONTRACTOR IN THE PRESENCE OF THE OWNER'S REPRESENTATIVE AND ANY UNSTABLE AREAS ENCOUNTERED SHALL BE REMOVED AND REPLACED AS DIRECTED BY THE ENGINEER AND SOILS ENGINEER. ANY UNDERCUT AND REPLACE NECESSARY WILL BE MEASURED FOR PAYMENT AT THE CONTRACT UNIT PRICE.

Copyright © 2014 Cemcon, Ltd. All rights reserved.

PREPARED FOR:
HARBOR RETIREMENT ASSOCIATES
1440 HIGHWAY A1A
VERO BEACH, FLORIDA 32963

PREPARED BY:
CEMCON, Ltd.
Consulting Engineers, Land Surveyors & Planners
2280 White Oak Circle, Suite 100
Aurora, Illinois 60502-9675
Ph: 630.862.2100 Fax: 630.862.2199
E-Mail: cadd@cemcon.com Website: www.cemcon.com

REVISIONS

NO.	DATE	DESCRIPTION	NO.	DATE	DESCRIPTION

CONSTRUCTION SPECIFICATIONS – GENERAL NOTES

HARBORCHASE OF LONG GROVE

FILE NAME: GENNOTES	DSGN. BY: KMM	JOB NO.: 814.003	FLD. BK./PG.: ---	SHEET NO. 3 of 20
DIR: 814003	DRN. BY: JGC	DATE: 10-10-14	SCALE: 1" = ---	

PLOT FILE CREATED: 10/9/2014 10:57 AM BY JEFF GEBULA DRAWING LAST SAVED: 10/8/2014 2:10 PM BY JEFF DRAWING PATH: P:\814003\DWG\ENG\DRAWINGS\FINAL DRAFTING\GENNOTES.DWG

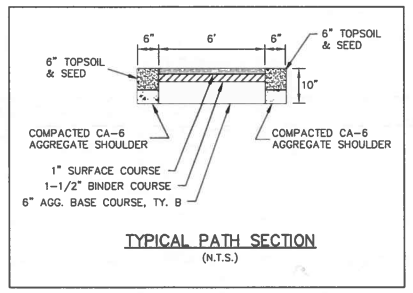

TYPICAL PATH SECTION
(N.T.S.)

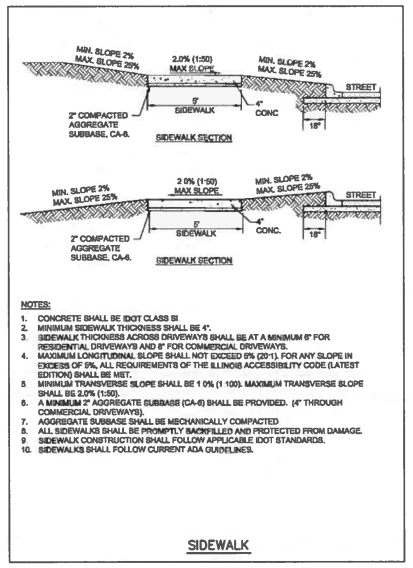

NOTES:
1. CONCRETE SHALL BE IDOT CLASS SI
2. MINIMUM SIDEWALK THICKNESS SHALL BE 4".
3. SIDEWALK THICKNESS ACROSS DRIVEWAYS SHALL BE AT A MINIMUM 6" FOR RESIDENTIAL DRIVEWAYS AND 8" FOR COMMERCIAL DRIVEWAYS.
4. MAXIMUM LONGITUDINAL SLOPE SHALL NOT EXCEED 5% (20:1). FOR ANY SLOPE IN EXCESS OF 5%, ALL REQUIREMENTS OF THE ILLINOIS ACCESSIBILITY CODE (LATEST EDITION) SHALL BE MET.
5. MINIMUM TRANSVERSE SLOPE SHALL BE 1.0% (1:100). MAXIMUM TRANSVERSE SLOPE SHALL BE 2.0% (1:50).
6. A MINIMUM 2" AGGREGATE SUBBASE (CA-6) SHALL BE PROVIDED. (4" THROUGH COMMERCIAL DRIVEWAYS).
7. AGGREGATE SUBBASE SHALL BE MECHANICALLY COMPACTED
8. ALL SIDEWALKS SHALL BE PROMPTLY BACKFILLED AND PROTECTED FROM DAMAGE.
9. SIDEWALK CONSTRUCTION SHALL FOLLOW APPLICABLE IDOT STANDARDS.
10. SIDEWALKS SHALL FOLLOW CURRENT ADA GUIDELINES.

SIDEWALK

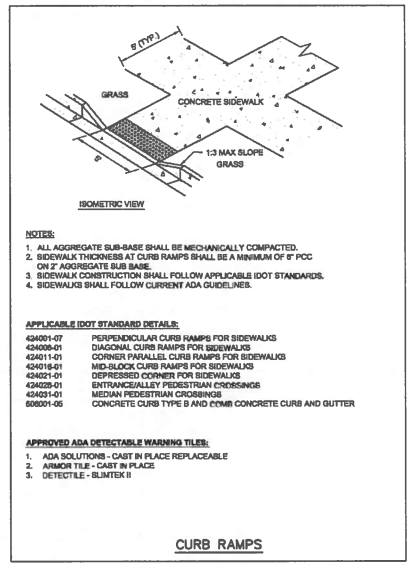

NOTES:
1. ALL AGGREGATE SUB-BASE SHALL BE MECHANICALLY COMPACTED.
2. SIDEWALK THICKNESS AT CURB RAMPS SHALL BE A MINIMUM OF 8" PCC ON 2" AGGREGATE SUB BASE.
3. SIDEWALK CONSTRUCTION SHALL FOLLOW APPLICABLE IDOT STANDARDS.
4. SIDEWALKS SHALL FOLLOW CURRENT ADA GUIDELINES.

APPLICABLE IDOT STANDARD DETAILS:

424011-07	PERPENDICULAR CURB RAMPS FOR SIDEWALKS
424036-01	DIAGONAL CURB RAMPS FOR SIDEWALKS
424011-01	CORNER PARALLEL CURB RAMPS FOR SIDEWALKS
424016-01	MID-BLOCK CURB RAMPS FOR SIDEWALKS
424021-01	DEPRESSED CORNER FOR SIDEWALKS
424025-01	ENTRANCE/ALLEY PEDESTRIAN CROSSINGS
424031-01	MEDIAN PEDESTRIAN CROSSINGS
606001-05	CONCRETE CURB TYPE B AND EXTRA CONCRETE CURB AND GUTTER

APPROVED ADA DETECTABLE WARNING TILES:
1. ADA SOLUTIONS - CAST IN PLACE REPLACEABLE
2. ADAMAS TILE - CAST IN PLACE
3. DETECTILE - SLIMTILE II

CURB RAMPS

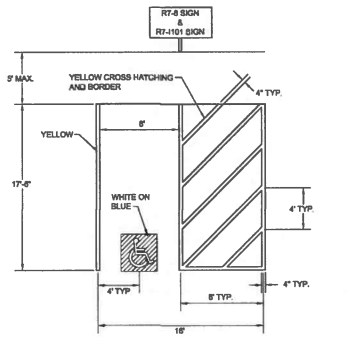

NOTE:
FOR MULTIPLE ACCESSIBLE PARKING SPACES IN A ROW, THE DESIGN ENGINEER HAS THE OPTION OF USING THE ABOVE SHOWN UNIT IN A COMBINATION OF LEFT-HANDED AND RIGHT-HANDED LAYOUTS IF IT PROVIDES FOR BETTER SITE DESIGN.

ACCESSIBLE PARKING SPACE MARKINGS

NOTES FOR ACCESSIBLE PARKING SPACES:
1. EACH PARKING SPACE SHALL BE AT LEAST 18' WIDE, WITH AN 8' WIDE ACCESS AISLE.
2. ADJACENT ACCESSIBLE PARKING SHALL NOT SHARE A COMMON ACCESS AISLE.
3. SIGNS SHALL BE VERTICALLY MOUNTED ON A PERMANENT POST OR A WALL AT THE FRONT CENTER BETWEEN THE SPACE AND THE ACCESS AISLE NO MORE THAN 8' HORIZONTALLY FROM THE FRONT OF A PARKING SPACE AND SET A MINIMUM OF 4' FROM THE FINISHED GRADE TO THE BOTTOM OF THE "$250 FINE" SIGN.
4. ACCESSIBLE PARKING SIGNS SHALL ALSO EXHIBIT THE WORDS "$250 FINE".
5. PARKING SPACES DESIGNED FOR PERSONS WITH DISABILITIES AND ACCESSIBLE PASSENGER LOADING ZONES THAT SERVE A PARTICULAR BUILDING, SHALL BE LOCATED ON THE SHORTEST POSSIBLE ACCESSIBLE CIRCULATION ROUTE TO AN ACCESSIBLE ENTRANCE OF THE BUILDING.
6. IN SEPARATE PARKING STRUCTURES OR LOTS THAT DO NOT SERVE A PARTICULAR BUILDING, PARKING SPACES FOR PERSONS WITH DISABILITIES SHALL BE LOCATED ON THE SHORTEST POSSIBLE CIRCULATION ROUTE TO AN ACCESSIBLE PEDESTRIAN ENTRANCE OF THE PARKING FACILITY.

# OF ACCESSIBLE SPACES REQUIRED PER # OF OFF STREET PARKING	
TOTAL OFF STREET PARKING SPACES REQUIRED	REQUIRED MINIMUM NUMBER OF ACCESSIBLE PARKING SPACES
1 TO 25	1
26 TO 50	2
51 TO 75	3
76 TO 100	4
101 TO 150	5
151 TO 200	6
201 TO 300	7
301 TO 400	8
401 TO 500	9
501 TO 1000	2% OF TOTAL NUMBER
OVER 1000	20 PLUS 1 FOR EACH 100 OVER 1000

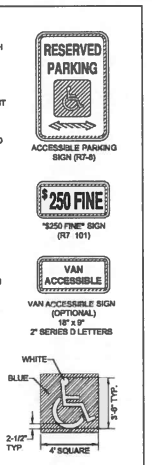

ACCESSIBLE PARKING SPACE MARKINGS

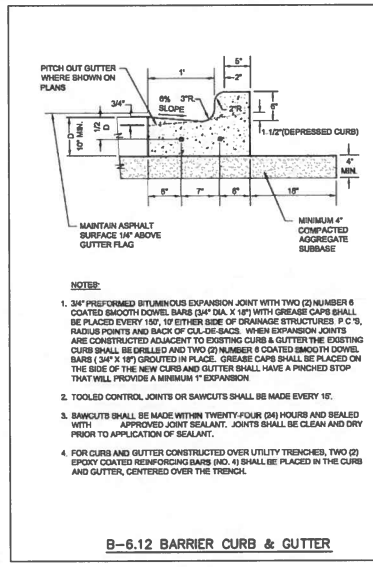

NOTES:
1. 3/4" PREFORMED BITUMINOUS EXPANSION JOINT WITH TWO (2) NUMBER 6 COATED SMOOTH DOWEL BARS (3/4" DIA. X 18") WITH GREASE CAPS SHALL BE PLACED EVERY 150', 10' EITHER SIDE OF DRAINAGE STRUCTURES, P.C.'S, RADIUS POINTS AND BACK OF CUL-DE-SACS. WHEN EXPANSION JOINTS ARE CONSTRUCTED ADJACENT TO EXISTING CURB & GUTTER THE EXISTING CURB SHALL BE DRILLED AND TWO (2) NUMBER 6 COATED SMOOTH DOWEL BARS (3/4" X 18") GROUTED IN PLACE. GREASE CAPS SHALL BE PLACED ON THE SIDE OF THE NEW CURB AND GUTTER SHALL HAVE A PINCHED STOP THAT WILL PROVIDE A MINIMUM 1" EXPANSION
2. TOOLED CONTROL JOINTS OR SAWCUTS SHALL BE MADE EVERY 10'.
3. SAWCUTS SHALL BE MADE WITHIN TWENTY-FOUR (24) HOURS AND SEALED WITH APPROVED JOINT SEALANT. JOINTS SHALL BE CLEAN AND DRY PRIOR TO APPLICATION OF SEALANT.
4. FOR CURB AND GUTTER CONSTRUCTED OVER UTILITY TRENCHES, TWO (2) EPOXY COATED REINFORCING BARS (NO. 4) SHALL BE PLACED IN THE CURB AND GUTTER, CENTERED OVER THE TRENCH.

B-6.12 BARRIER CURB & GUTTER

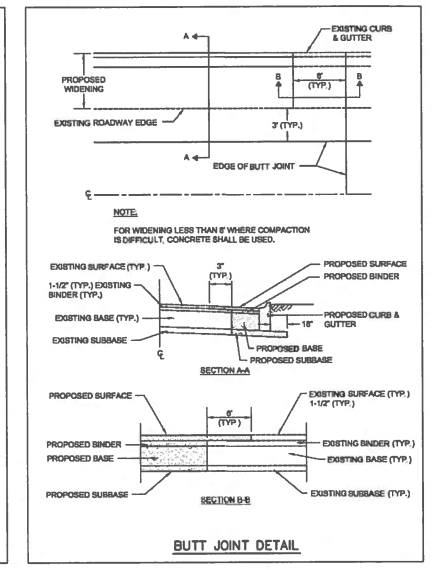

BUTT JOINT DETAIL

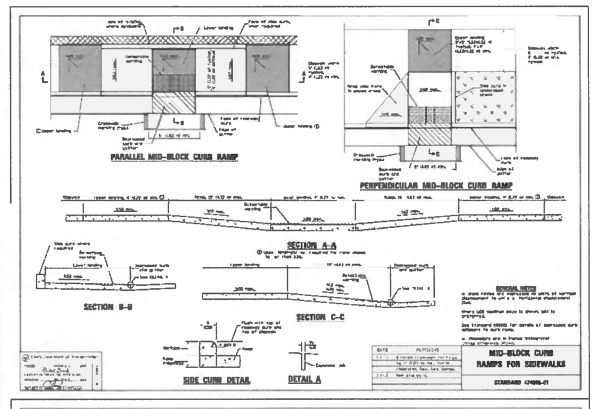

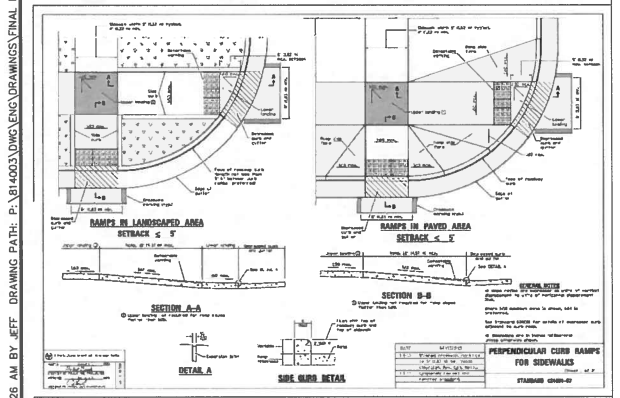

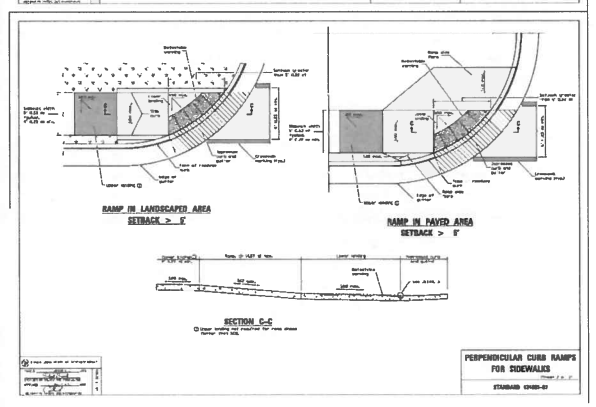

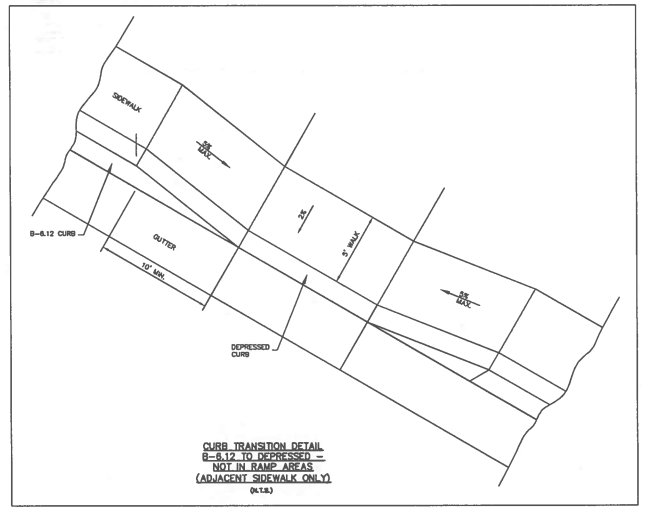

CURB TRANSITION DETAIL
B-6.12 TO DEPRESSED
NOT IN RAMP AREAS
(ADJACENT SIDEWALK ONLY)
(N.T.S.)

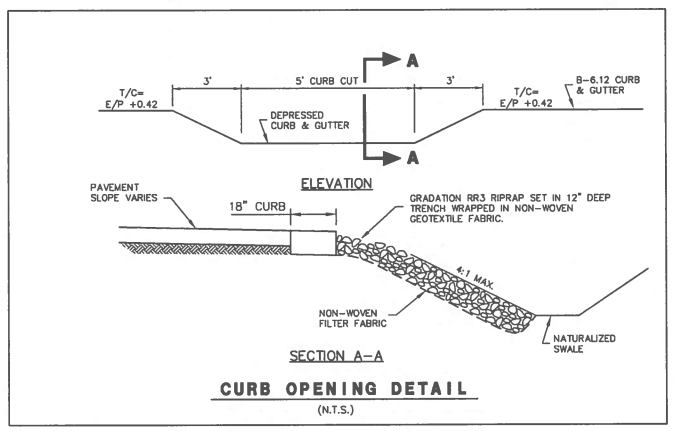

CURB OPENING DETAIL
(N.T.S.)

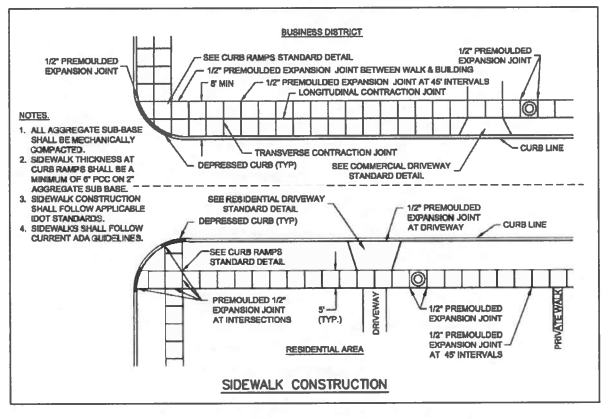

SIDEWALK CONSTRUCTION

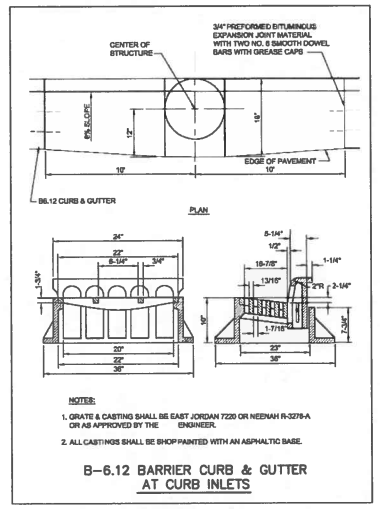

B-6.12 BARRIER CURB & GUTTER AT CURB INLETS

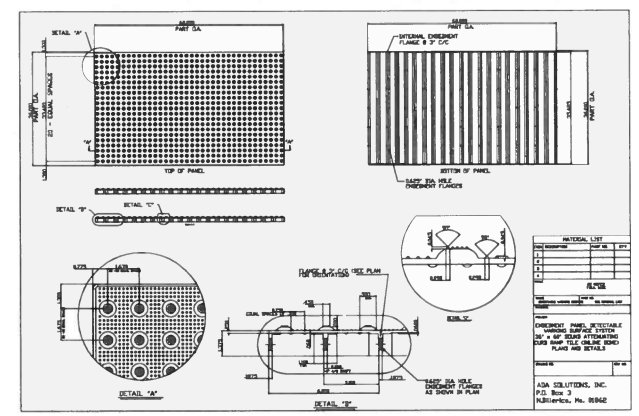

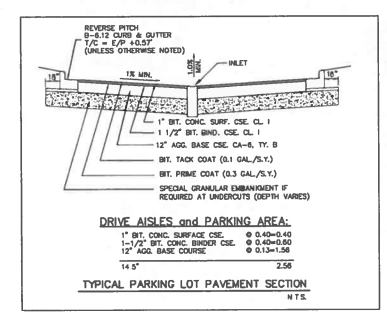

TYPICAL PARKING LOT PAVEMENT SECTION
N.T.S.

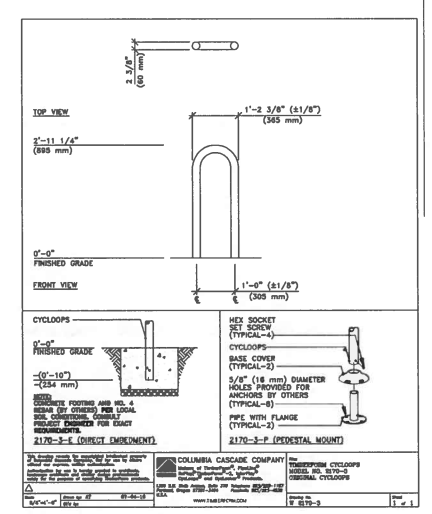

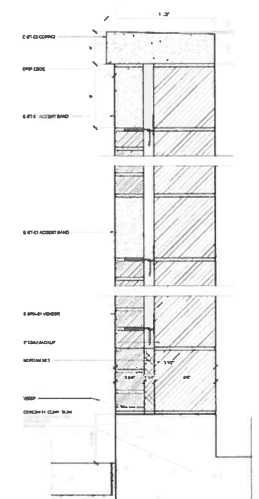

6 TRASH ENCLOSURE SECTION

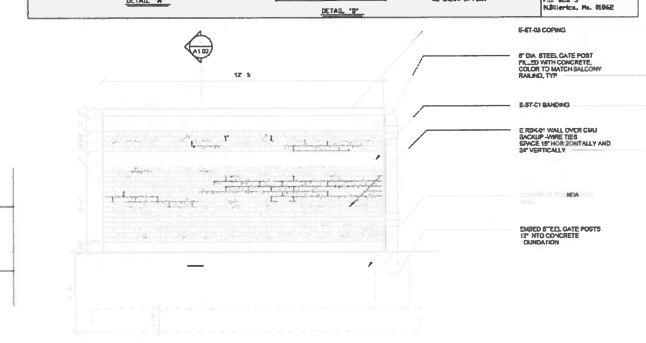

CLOSURE SIDE ELEVATION

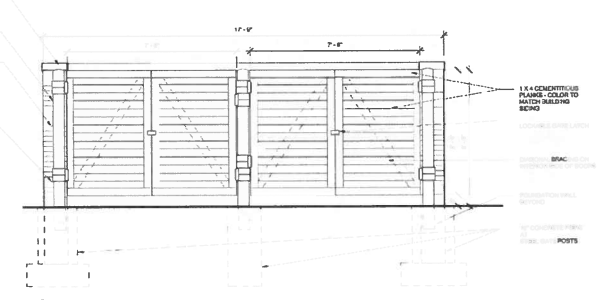

2 TRASH ENCLOSURE FRONT ELEVATION
SCALE: 1/2" = 1'-0"

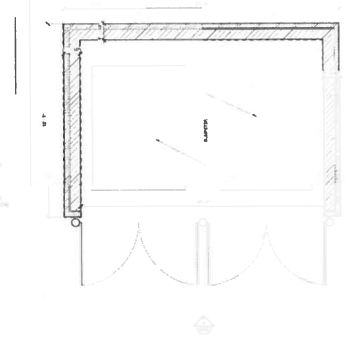

1 TRASH ENCLOSURE PLAN

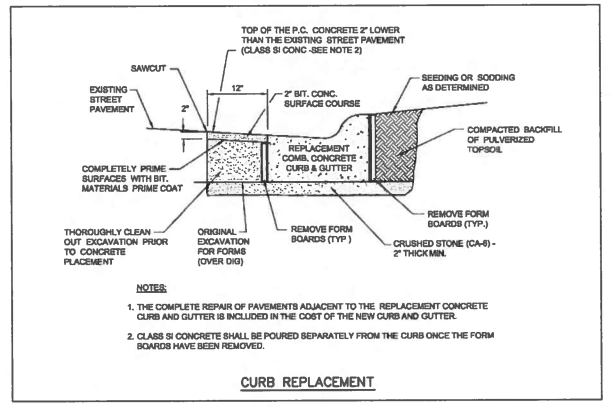

CURB REPLACEMENT

Copyright © 2014 Cemcon, Ltd. All rights reserved.

PREPARED FOR:
HARBOR RETIREMENT ASSOCIATES
1440 HIGHWAY A1A
VERO BEACH, FLORIDA 32963

PREPARED BY:
CEMCON, Ltd.
Consulting Engineers, Land Surveyors & Planners
2280 White Oak Circle, Suite 100
Aurora, Illinois 60502-9675
Ph: 630.862.2100 Fax: 630.862.2199
E-Mail: cadd@cemcon.com Website: www.cemcon.com

REVISIONS

NO.	DATE	DESCRIPTION	NO.	DATE	DESCRIPTION

STREET PAVEMENT DESIGN AND DETAILS
HARBORCHASE OF LONG GROVE

FILE NAME: DETAILS	DSGN. BY: KMM	JOB NO.: 814.003	FLD. BK./PG.: ---	SHEET NO. 4 of 20
DIR: 814003	DRN. BY: JGC	DATE: 10-10-14	SCALE: 1" = N.T.S.	

PLOT FILE CREATED: 10/9/2014 11:26 AM BY JEFF CEBULA DRAWING LAST SAVED: 10/9/2014 11:26 AM BY JEFF DRAWING PATH: P:\814003\DWG\ENG\DRAWINGS\FINAL DRAFTING\DETAILS.DWG

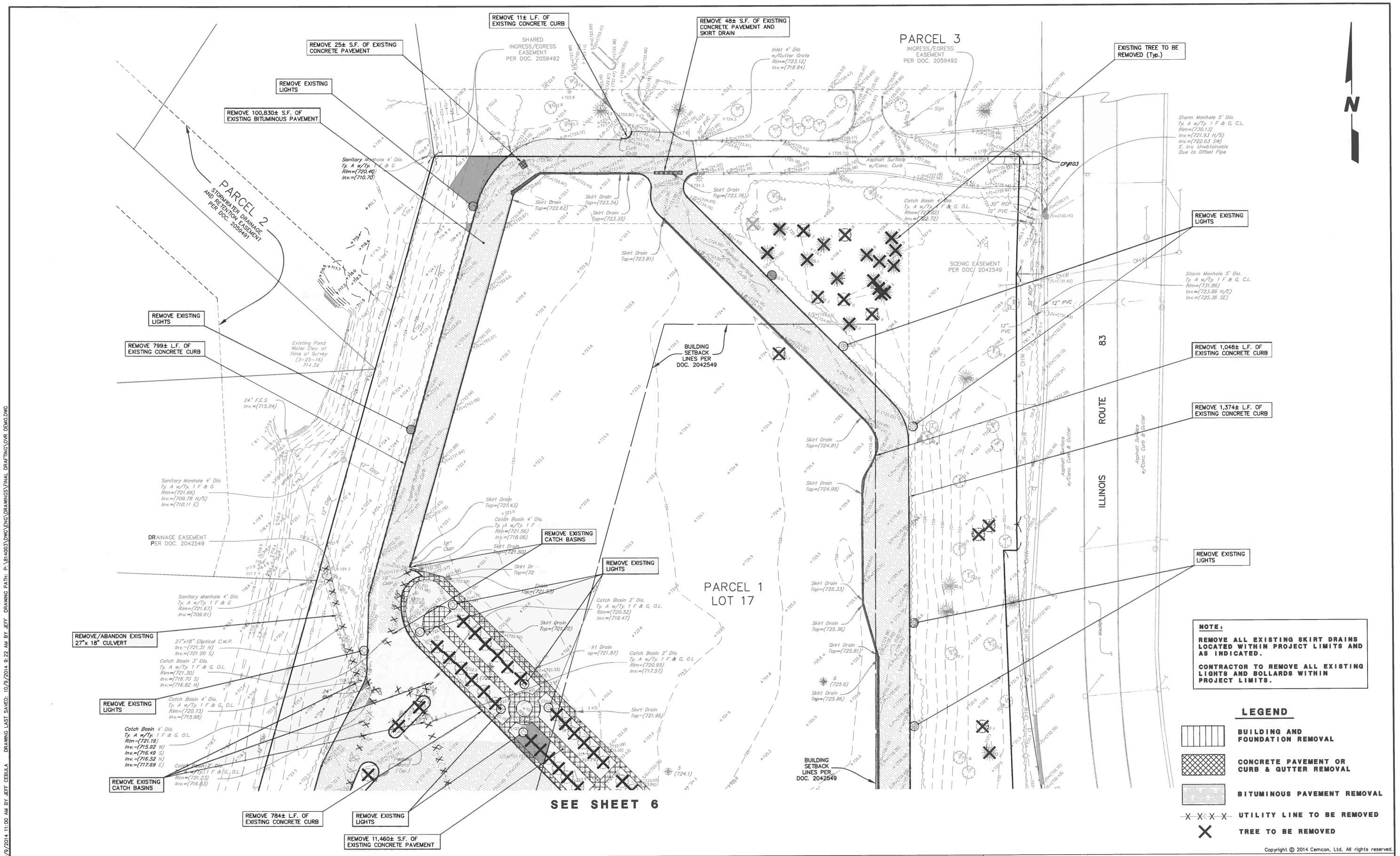

NOTE:

REMOVE ALL EXISTING SKIRT DRAINS LOCATED WITHIN PROJECT LIMITS AND AS INDICATED.

CONTRACTOR TO REMOVE ALL EXISTING LIGHTS AND BOLLARDS WITHIN PROJECT LIMITS.

LEGEND

- BUILDING AND FOUNDATION REMOVAL
- CONCRETE PAVEMENT OR CURB & GUTTER REMOVAL
- BITUMINOUS PAVEMENT REMOVAL
- UTILITY LINE TO BE REMOVED
- TREE TO BE REMOVED

Copyright © 2014 Cemcon, Ltd. All rights reserved.

PREPARED FOR:
HARBOR RETIREMENT ASSOCIATES
1440 HIGHWAY A1A
VERO BEACH, FLORIDA 32963

PREPARED BY:
CEMCON, Ltd.
Consulting Engineers, Land Surveyors & Planners
2280 White Oak Circle, Suite 100
Aurora, Illinois 60502-9675
Ph: 630.862.2100 Fax: 630.862.2199
E-Mail: cadd@cemcon.com Website: www.cemcon.com

REVISIONS

NO.	DATE	DESCRIPTION	NO.	DATE	DESCRIPTION

DEMOLITION PLAN

HARBORCHASE OF LONG GROVE

FILE NAME: OVR DEMO	DSGN. BY: KMM	JOB NO.: 814.003	FLD. BK./PG.: ---
DIR: 814003	DRN. BY: JGC	DATE: 10-10-14	SCALE: 1" = 30'

SHEET NO. 5 of 20

PLOT FILE CREATED: 10/9/2014 11:00 AM BY JEFF CEBULA DRAWING LAST SAVED: 10/9/2014 9:22 AM BY JEFF DRAWING PATH: P:\814003\DWG\ENG\DRAWINGS\FINAL DRAFTING\OVR DEMO.DWG

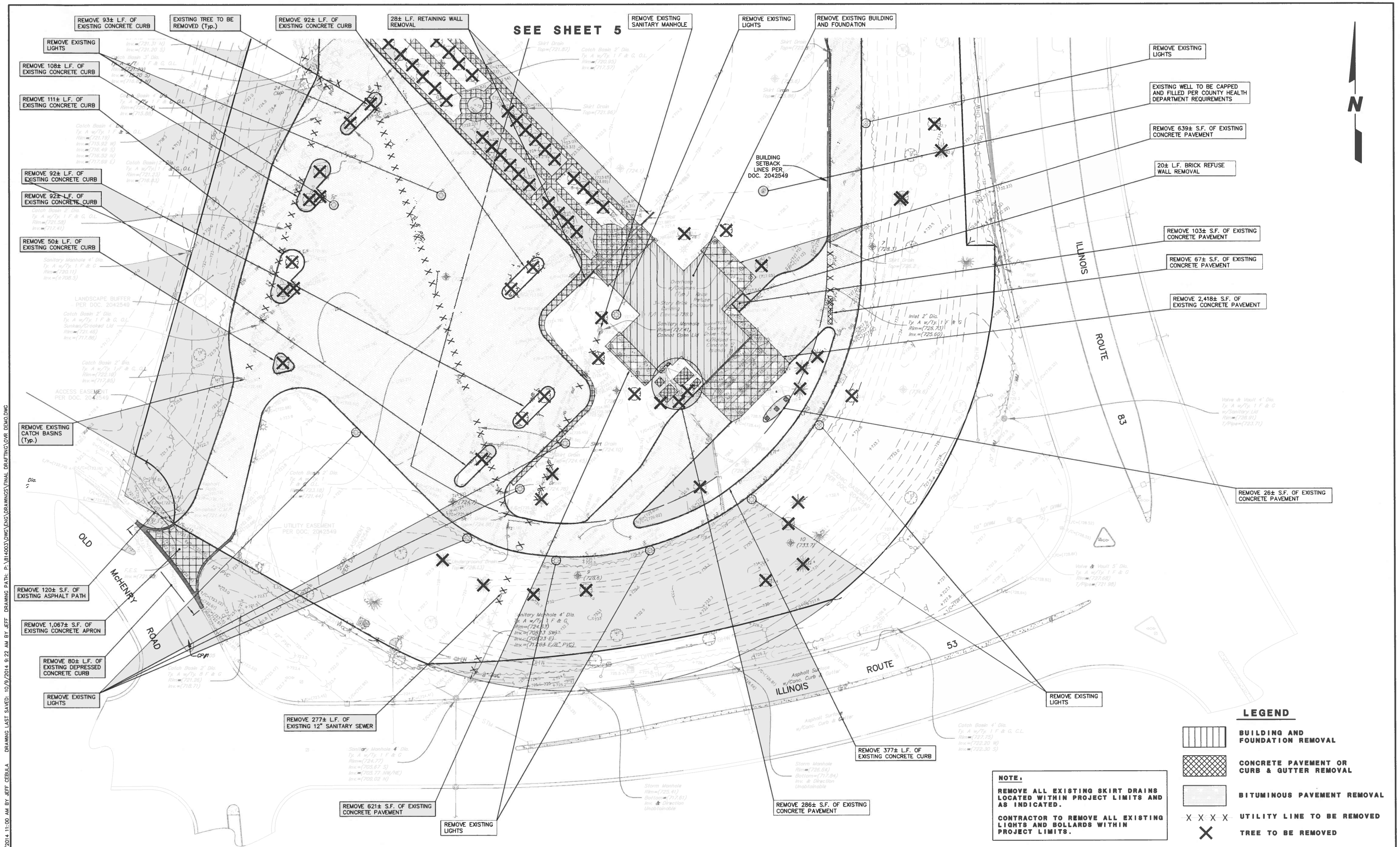

LEGEND

- BUILDING AND FOUNDATION REMOVAL
- CONCRETE PAVEMENT OR CURB & GUTTER REMOVAL
- BITUMINOUS PAVEMENT REMOVAL
- X X X X UTILITY LINE TO BE REMOVED
- X TREE TO BE REMOVED

NOTE:

REMOVE ALL EXISTING SKIRT DRAINS LOCATED WITHIN PROJECT LIMITS AND AS INDICATED.

CONTRACTOR TO REMOVE ALL EXISTING LIGHTS AND BOLLARDS WITHIN PROJECT LIMITS.

Copyright © 2014 Cemcon, Ltd. All rights reserved.

PREPARED FOR:
HARBOR RETIREMENT ASSOCIATES
1440 HIGHWAY A1A
VERO BEACH, FLORIDA 32963

PREPARED BY:
CEMCON, Ltd.
Consulting Engineers, Land Surveyors & Planners
2280 White Oak Circle, Suite 100
Aurora, Illinois 60502-9675
Ph: 630.862.2100 Fax: 630.862.2199
E-Mail: cadd@cemcon.com Website: www.cemcon.com

REVISIONS

NO.	DATE	DESCRIPTION	NO.	DATE	DESCRIPTION

DEMOLITION PLAN

HARBORCHASE OF LONG GROVE

FILE NAME: OVR DEMO	DSGN. BY: KMM	JOB NO.: 814.003	FLD. BK./PG.: ---	SHEET NO. 6 of 20
DIR: 814003	DRN. BY: JGC	DATE: 10-10-14	SCALE: 1" = 30'	

PLOT FILE CREATED: 10/9/2014 11:00 AM BY JEFF CEBULA DRAWING LAST SAVED: 10/9/2014 9:22 AM BY JEFF DRAWING PATH: P:\814003\DWG\ENG\DRAWINGS\FINAL DRAFTING\OVR DEMO.DWG

CURVE TABLE					
CURVE	LENGTH	RADIUS	CHORD	BEARING	DELTA
CURVE NO. 1	29.73'	50.00'	29.30'	N 32°39'25" E	34°04'11"
CURVE NO. 2	38.95'	100.00'	38.71'	S 26°46'52" W	22°19'04"
CURVE NO. 3	38.95'	100.00'	38.71'	N 26°46'52" E	22°19'04"
CURVE NO. 4	54.23'	75.00'	53.06'	S 36°20'12" W	41°25'45"
CURVE NO. 5	74.43'	75.00'	71.41'	N 28°37'17" E	56°51'35"
CURVE NO. 6	16.86'	100.00'	16.84'	S 55°25'22" E	9°39'31"
CURVE NO. 7	225.56'	195.00'	213.19'	N 86°36'39" E	66°16'27"
CURVE NO. 8	66.06'	100.00'	64.87'	N 34°32'53" E	37°51'05"
CURVE NO. 9	26.93'	100.00'	26.85'	N 07°54'25" E	15°25'50"
CURVE NO. 10	78.71'	50.00'	70.83'	N 44°54'15" W	90°11'29"
CURVE NO. 11	62.52'	75.00'	60.72'	S 66°07'11" E	47°45'36"

SEE SHEET 8

LEGEND

EXISTING	PROPOSED	DESCRIPTION
		PARKING LOT LIGHT
		B-6.12 CURB
		REVERSE PITCH B-6.12 CURB
		DEPRESSED CURB
		DETECTABLE WARNING STRIP
		PAVER BLOCKS (COLOR AND PATTERN TO BE DETERMINED BY OWNER)
		KIM CC21A2, 21' ARM MOUNTED, 18' POLE HT., LED, SINGLE FIXTURE
		KIM CC21A2, 21' ARM MOUNTED, 18' POLE HT., LED, DOUBLE FIXTURE
		KIM CC17A2, 17' ARM MOUNTED, 12' POLE HT., LED, SINGLE FIXTURE
		KIM BOLLARD, CONCRETE SHAFT, 42" HT., GEMIC, LED
		KIM H80 DB, LED
		B-K LIGHTING, NITE STAR, MEDIUM FLOOD, LED (AT TREES)
		B-K LIGHTING, NITE STAR, WIDE FLOOD, LED (AT SIGNS)
		100 WATT H.P.S. (CLEAR) LUMIN. STD. 23' MOUNTING HEIGHT G.E. M-C-III. (LOCAL STREETS)
		250 WATT H.P.S. (CLEAR) LUMIN. STD. 32' MOUNTING HEIGHT G.E. M-C-III. (COLLECTOR STREETS)
		STREET LIGHT W/ STREET SIGN
	NO.	NUMBERING SYSTEM USED FOR LIGHT POLE/STREET LIGHT IDENTIFICATION.
	NO.	NUMBERING SYSTEM USED FOR IDENTIFYING CURB RETURN LOCATIONS. SEE SHEET 6 FOR FURTHER INFORMATION.

NOTE:
SEE DETAILS ON SHEET 4 FOR CURB TRANSITION FROM B-6.12 TO DEPRESSED CURB AND GUTTER.

GENERAL NOTES

1. ALL ELECTRIC FACILITIES WILL BE INSTALLED PER THE VILLAGE OF LONG GROVE MUNICIPAL CODE.
2. CONTRACTOR WILL COORDINATE UNDERGROUND WIRING INSTALLATION AND LOCATION OF TRANSFORMERS WITH THE VILLAGE ELECTRICAL DEPARTMENT.
3. LAYOUT FOR STREET LIGHTS SHOULD NOT BE REFERENCED FROM THESE PLANS, BUT FROM THE RECORDED PLAT OF SUBDIVISION.
4. LUMINAIRE STANDARDS SHALL BE LOCATED 5' BEHIND THE CURB OR AS DIRECTED BY THE VILLAGE.
5. SEE UTILITY SHEETS AND DRAINAGE & GRADING SHEETS FOR PROPOSED LOCATION OF UNDERGROUND UTILITIES.
6. ALL LUMINAIRES WITH STANDARDS SHALL BE INSTALLED COMPLETE WITH DIRECT BURIAL CABLE, AS REQUIRED TO CONNECT TO VILLAGE TRANSFORMERS.
7. CONTRACTOR SHALL NOTIFY THE VILLAGE 30 DAYS BEFORE CONSTRUCTION OF CURBS AND STREET PAVEMENTS FOR INSTALLATION OF ELECTRICAL CONDUIT UNDER ROADWAYS. AT THE TIME OF NOTIFICATION, STREETS SHALL BE WITHIN 0.1' OF SUB-BASE GRADE.
8. THE CONTRACTOR SHALL SUBMIT SHOP DRAWINGS FOR POLES AND LUMINAIRES (INCLUDING BALLAST INFORMATION) TO THE ENGINEER AND VILLAGE FOR REVIEW BEFORE ORDERING LIGHTING MATERIALS.
9. YELLOW WARNING TAPE SHALL BE PLACED IN THE TRENCH THROUGHOUT THE ENTIRE CABLE ROUTE FOR THE STREET LIGHTING SYSTEM. TAPE SHALL BE LOCATED 12" ABOVE STREET LIGHT CONDUCTOR.
10. ELECTRIC WARNING TAPE SHALL BE YELLOW WITH THE WORD "ELECTRIC" PRINTED ON IT. IT SHALL BE INSTALLED IN THE SAME TRENCH AS THE STREET LIGHT CABLE BUT IT WILL BE ONE FOOT BELOW FINAL GRADE.

CURB DIMENSION NOTES

1. ALL CURB DIMENSIONS ARE BACK OF CURB TO BACK OF CURB
2. CURB ALONG BUILDINGS DIMENSIONED FROM BACK OF CURB TO FACE OF BUILDING.
3. ALL RADIUS ARE 5.0' TO THE BACK OF CURB UNLESS NOTED OTHERWISE.
4. ALL PARKING STALLS ADJACENT TO ISLANDS ARE 9.5' WIDE ALL OTHER STALLS ARE 9.0' WIDE (TYP.)
5. ALL ADA PARKING STALLS ADJACENT TO ISLANDS ARE 18.5' WIDE ALL OTHER ADA STALLS ARE 18.0' WIDE (TYP.)

PREPARED FOR:
HARBOR RETIREMENT ASSOCIATES
1440 HIGHWAY A1A
VERO BEACH, FLORIDA 32963

PREPARED BY:
CEMCON, Ltd.
Consulting Engineers, Land Surveyors & Planners
2280 White Oak Circle, Suite 100
Aurora, Illinois 60502-9675
Ph: 630.862.2100 Fax: 630.862.2199
E-Mail: cadd@cemcon.com Website: www.cemcon.com

REVISIONS

NO.	DATE	DESCRIPTION	NO.	DATE	DESCRIPTION

GEOMETRIC – LIGHTING AND PARKING LOT SIGNAGE PLAN

HARBORCHASE OF LONG GROVE

FILE NAME: OVR GEO	DSGN. BY: KMM	JOB NO.: 814.003	FLD. BK./PG.: ---	SHEET NO.
DIR: 814003	DRN. BY: JGC	DATE: 10-10-14	SCALE: 1" = 30'	7 of 20

PLOT FILE CREATED: 10/9/2014 2:39 PM BY JEFF CEBULA DRAWING LAST SAVED: 10/9/2014 2:38 PM BY JEFF DRAWING PATH: P:\814003\DWG\ENG\DRAWINGS\FINAL DRAFTING\OVR GEO.DWG

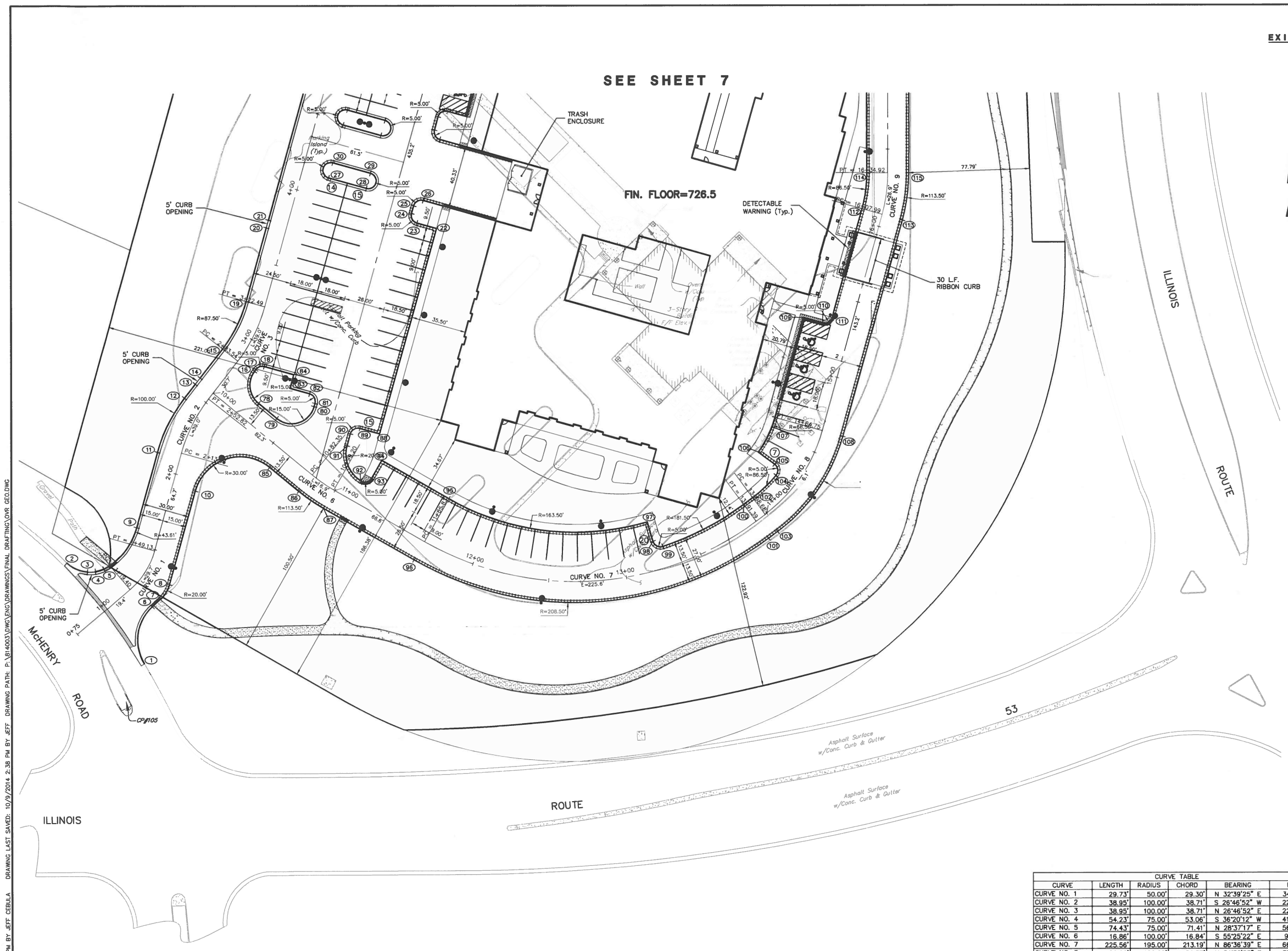

LEGEND

EXISTING	PROPOSED	DESCRIPTION
		PARKING LOT LIGHT
		B-6.12 CURB
		REVERSE PITCH B-6.12 CURB
		DEPRESSED CURB
		DETECTABLE WARNING STRIP
		PAVER BLOCKS (COLOR AND PATTERN TO BE DETERMINED BY OWNER)
		KIM CC21A2, 21' ARM MOUNTED, 18' POLE HT., LED, SINGLE FIXTURE
		KIM CC21A2, 21' ARM MOUNTED, 18' POLE HT., LED, DOUBLE FIXTURE
		KIM CC17A2, 17' ARM MOUNTED, 12' POLE HT., LED, SINGLE FIXTURE
		KIM BOLLARD, CONCRETE SHAFT, 42" HT., GEMIC, LED
		KIM H80 DB, LED
		B-K LIGHTING, NITE STAR, MEDIUM FLOOD, LED (AT TREES)
		B-K LIGHTING, NITE STAR, WIDE FLOOD, LED (AT SIGNS)
		100 WATT H.P.S. (CLEAR) LUMIN. STD. 23' MOUNTING HEIGHT G.E. M-C-III. (LOCAL STREETS)
		250 WATT H.P.S. (CLEAR) LUMIN. STD. 32' MOUNTING HEIGHT G.E. M-C-III. (COLLECTOR STREETS)
		STREET LIGHT W/ STREET SIGN
	NO.	NUMBERING SYSTEM USED FOR LIGHT POLE/STREET LIGHT IDENTIFICATION.
	NO.	NUMBERING SYSTEM USED FOR IDENTIFYING CURB RETURN LOCATIONS. SEE SHEET 6 FOR FURTHER INFORMATION.

NOTE:
SEE DETAILS ON SHEET 4 FOR CURB TRANSITION FROM B-6.12 TO DEPRESSED CURB AND GUTTER.

GENERAL NOTES

1. ALL ELECTRIC FACILITIES WILL BE INSTALLED PER THE VILLAGE OF LONG GROVE MUNICIPAL CODE.
2. CONTRACTOR WILL COORDINATE UNDERGROUND WIRING INSTALLATION AND LOCATION OF TRANSFORMERS WITH THE VILLAGE ELECTRICAL DEPARTMENT.
3. LAYOUT FOR STREET LIGHTS SHOULD NOT BE REFERENCED FROM THESE PLANS, BUT FROM THE RECORDED PLAT OF SUBDIVISION.
4. LUMINAIRE STANDARDS SHALL BE LOCATED 5' BEHIND THE CURB OR AS DIRECTED BY THE VILLAGE.
5. SEE UTILITY SHEETS AND DRAINAGE & GRADING SHEETS FOR PROPOSED LOCATION OF UNDERGROUND UTILITIES.
6. ALL LUMINAIRES WITH STANDARDS SHALL BE INSTALLED COMPLETE WITH DIRECT BURIAL CABLE, AS REQUIRED TO CONNECT TO VILLAGE TRANSFORMERS.
7. CONTRACTOR SHALL NOTIFY THE VILLAGE 30 DAYS BEFORE CONSTRUCTION OF CURBS AND STREET PAVEMENTS FOR INSTALLATION OF ELECTRICAL CONDUIT UNDER ROADWAYS. AT THE TIME OF NOTIFICATION, STREETS SHALL BE WITHIN 0.1' OF SUB-BASE GRADE.
8. THE CONTRACTOR SHALL SUBMIT SHOP DRAWINGS FOR POLES AND LUMINAIRES (INCLUDING BALLAST INFORMATION) TO THE ENGINEER AND VILLAGE FOR REVIEW BEFORE ORDERING LIGHTING MATERIALS.
9. YELLOW WARNING TAPE SHALL BE PLACED IN THE TRENCH THROUGHOUT THE ENTIRE CABLE ROUTE FOR THE STREET LIGHTING SYSTEM. TAPE SHALL BE LOCATED 12" ABOVE STREET LIGHT CONDUCTOR.
10. ELECTRIC WARNING TAPE SHALL BE YELLOW WITH THE WORD "ELECTRIC" PRINTED ON IT. IT SHALL BE INSTALLED IN THE SAME TRENCH AS THE STREET LIGHT CABLE BUT IT WILL BE ONE FOOT BELOW FINAL GRADE.

CURB DIMENSION NOTES

1. ALL CURB DIMENSIONS ARE BACK OF CURB TO BACK OF CURB
2. CURB ALONG BUILDINGS DIMENSIONED FROM BACK OF CURB TO FACE OF BUILDING.
3. ALL RADIUS ARE 5.0' TO THE BACK OF CURB UNLESS NOTED OTHERWISE.
4. ALL PARKING STALLS ADJACENT TO ISLANDS ARE 9.5' WIDE ALL OTHER STALLS ARE 9.0' WIDE (TYP.)
5. ALL ADA PARKING STALLS ADJACENT TO ISLANDS ARE 18.5' WIDE ALL OTHER ADA STALLS ARE 18.0' WIDE (TYP.)

CURVE TABLE

CURVE	LENGTH	RADIUS	CHORD	BEARING	DELTA
CURVE NO. 1	29.73'	50.00'	29.30'	N 32°39'25" E	34°04'11"
CURVE NO. 2	38.95'	100.00'	38.71'	S 26°46'52" W	22°19'04"
CURVE NO. 3	38.95'	100.00'	38.71'	N 26°46'52" E	22°19'04"
CURVE NO. 4	54.23'	75.00'	53.06'	S 36°20'12" W	41°25'45"
CURVE NO. 5	74.43'	75.00'	71.41'	N 28°37'17" E	56°51'35"
CURVE NO. 6	16.86'	100.00'	16.84'	S 55°25'22" E	9°39'31"
CURVE NO. 7	225.56'	195.00'	213.19'	N 86°36'39" E	68°16'27"
CURVE NO. 8	66.06'	100.00'	64.87'	N 34°32'53" E	37°51'05"
CURVE NO. 9	26.93'	100.00'	26.85'	N 07°54'25" E	15°25'50"
CURVE NO. 10	78.71'	50.00'	70.83'	N 44°54'15" W	90°11'29"
CURVE NO. 11	62.52'	75.00'	60.72'	S 66°07'11" E	47°45'36"

PREPARED FOR:
HARBOR RETIREMENT ASSOCIATES
1440 HIGHWAY A1A
VERO BEACH, FLORIDA 32963

PREPARED BY:
CEMCON, Ltd.
Consulting Engineers, Land Surveyors & Planners
2280 White Oak Circle, Suite 100
Aurora, Illinois 60502-9675
Ph: 630.862.2100 Fax: 630.862.2199
E-Mail: cadd@cemcon.com Website: www.cemcon.com

REVISIONS

NO.	DATE	DESCRIPTION	NO.	DATE	DESCRIPTION

GEOMETRIC – LIGHTING AND PARKING LOT SIGNAGE PLAN

HARBORCHASE OF LONG GROVE

FILE NAME: OVR GEO	DSGN. BY: KMM	JOB NO.: 814.003	FLD. BK./PG.: ---	SHEET NO. 8 of 20
DIR: 814003	DRN. BY: JGC	DATE: 10-10-14	SCALE: 1" = 30'	

PLOT FILE CREATED: 10/9/2014 2:39 PM BY JEFF CEBULA DRAWING LAST SAVED: 10/9/2014 2:39 PM BY JEFF DRAWING PATH: P:\814003\DWG\ENG\DRAWINGS\FINAL DRAFTING\OVR GEO.DWG

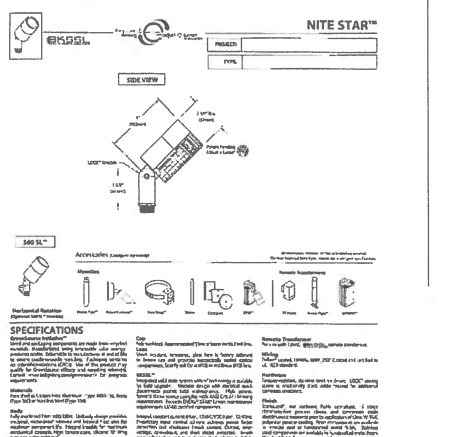

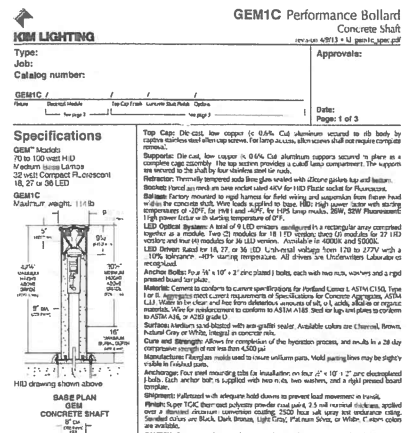

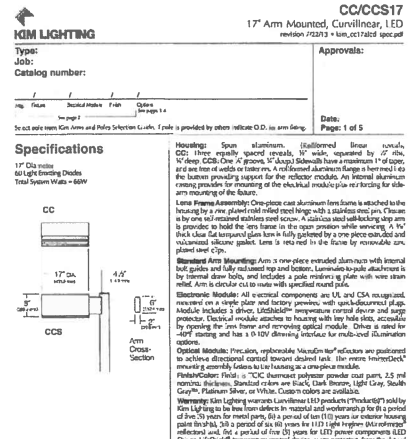

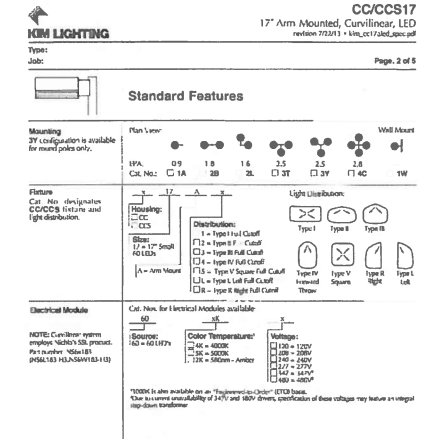

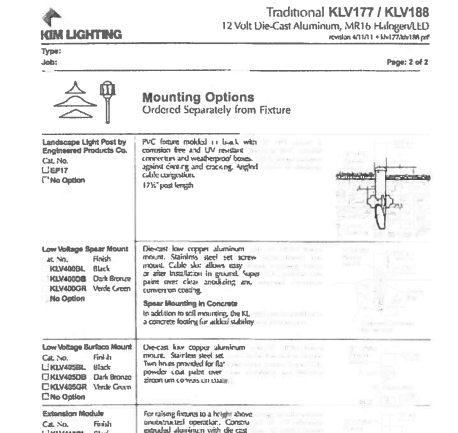

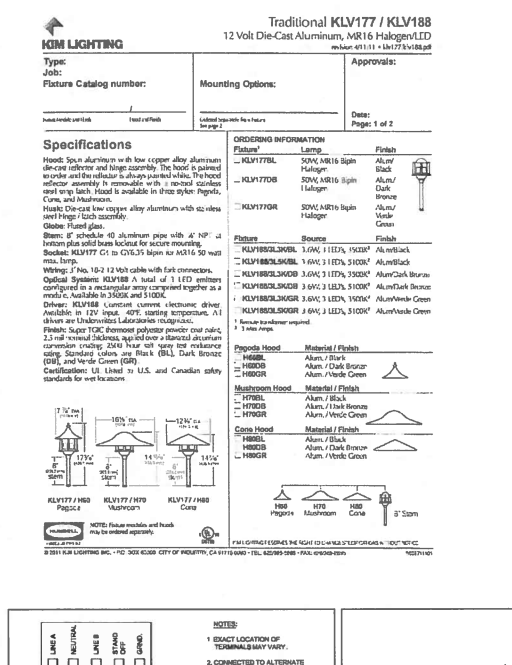

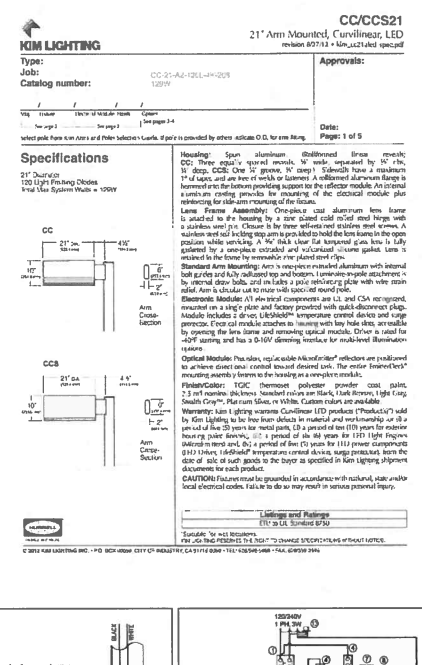

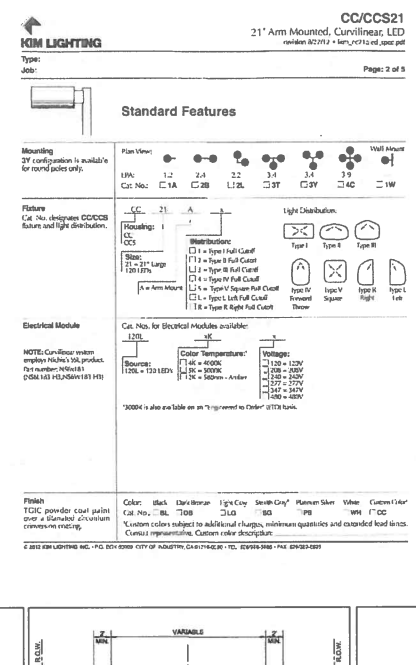

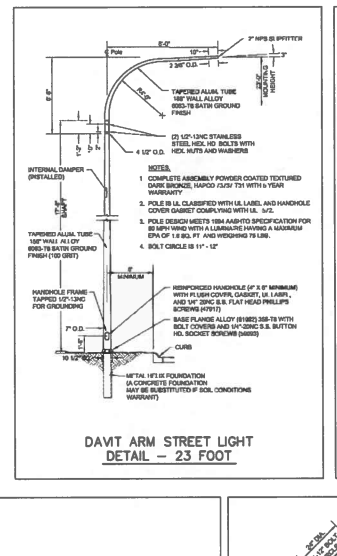

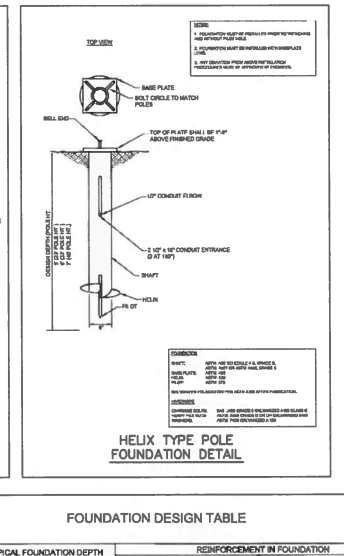

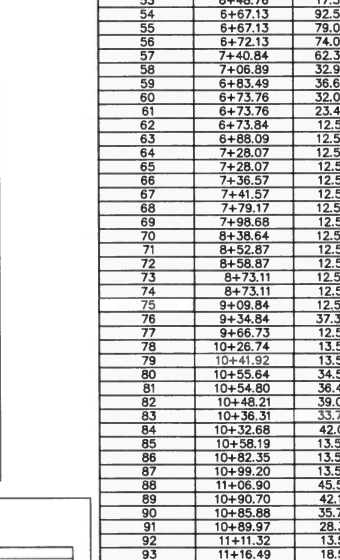

CURB RETURN TABLE

CURB RETURN	STATION	OFFSET	T/C ELEV.*
1	0+95.62	42.14' RT.	723.2 (M.E.)
2	0+99.38	39.04' LT.	723.1 (M.E.)
3	1+05.78	26.08' LT.	722.4 (E/P)
4	1+09.73	23.01' LT.	722.4 (E/P)
5	1+14.92	20.73' LT.	722.8
6	1+22.04	17.81' RT.	723.6 (T/DC)
7	1+27.32	18.33' RT.	723.6 (T/DC)
8	1+35.46	17.51' RT.	724.2 (T/RP)
9	1+60.34	15.00' LT.	724.2
10	1+92.97	15.00' RT.	724.5 (T/RP)
11	2+10.24	15.00' LT.	723.6
12	2+44.79	12.86' LT.	723.2
13	2+55.08	12.50' LT.	722.5 (E/P)
14	2+60.08	12.50' LT.	722.5 (E/P)
15	2+63.54	12.50' LT.	723.25
16	2+84.85	12.48' RT.	723.9 (T/RP)
17	2+86.12	12.46' RT.	723.9 (T/RP)
18	2+90.21	15.78' RT.	724.0 (T/RP)
19	3+22.49	12.50' LT.	723.6
20	3+71.34	12.50' LT.	722.5 (E/P)
21	3+76.34	12.50' LT.	722.5 (E/P)
22	4+00.09	92.50' RT.	725.5 (T/RP)
23	4+00.09	79.50' RT.	725.3 (T/RP)
24	4+00.09	74.50' RT.	725.4 (T/RP)
25	4+10.09	74.50' RT.	725.5 (T/RP)
26	4+15.09	79.50' RT.	725.7 (T/RP)
27	4+12.76	17.50' RT.	724.2 (T/RP)
28	4+12.76	42.50' RT.	724.8
29	4+22.76	42.50' RT.	725.2
30	4+22.76	17.50' RT.	724.4 (T/RP)
31	4+47.76	17.50' RT.	724.5 (T/RP)
32	4+47.76	42.50' RT.	725.3
33	4+57.76	42.50' RT.	725.2
34	4+57.76	17.50' RT.	724.1 (T/RP)
35	4+55.42	79.50' RT.	726.1 (T/RP)
36	4+60.42	74.50' RT.	725.8 (T/RP)
37	4+69.13	74.50' RT.	725.6 (T/RP)
38	4+74.13	79.50' RT.	726.05 (T/RP)
39	4+74.13	92.50' RT.	725.8 (T/RP)
40	4+91.34	12.50' LT.	725.2 (T/RP)
41	4+96.34	12.50' LT.	722.5 (E/P)
42	5+56.13	12.50' LT.	725.7 (T/RP)
43	5+56.13	79.50' RT.	725.5 (T/RP)
44	5+61.13	74.50' RT.	725.4 (T/RP)
45	5+71.13	74.50' RT.	725.4 (T/RP)
46	5+76.13	79.50' RT.	725.5 (T/RP)
47	5+76.13	92.50' RT.	725.7 (T/RP)
48	6+04.34	12.50' LT.	722.5 (E/P)
49	6+09.34	12.50' LT.	722.5 (E/P)
50	6+38.76	17.50' RT.	724.4 (T/RP)
51	6+38.76	42.50' RT.	724.8
52	6+48.76	42.50' RT.	724.8
53	6+48.76	17.50' RT.	724.4 (T/RP)
54	6+67.13	92.50' RT.	725.7 (T/RP)
55	6+67.13	79.00' RT.	725.5 (T/RP)
56	6+72.13	74.00' RT.	725.5 (T/RP)
57	7+40.84	62.39' RT.	725.7 (T/RP)
58	7+06.89	32.99' RT.	725.0 (T/RP)
59	6+83.49	36.68' RT.	724.8 (T/RP)
60	6+73.76	32.00' RT.	724.7 (T/RP)
61	6+73.76	23.45' RT.	724.5 (T/RP)
62	6+73.84	12.50' LT.	723.7
63	6+88.09	12.50' RT.	724.15 (T/RP)
64	7+28.07	12.50' RT.	723.7 (T/RP)
65	7+28.07	12.50' LT.	723.1
66	7+36.57	12.50' LT.	722.5 (E/P)
67	7+41.57	12.50' LT.	722.5 (E/P)
68	7+79.17	12.50' RT.	724.1 (T/RP)
69	7+98.68	12.50' LT.	723.6
70	8+38.64	12.50' RT.	723.9 (T/RP)
71	8+52.87	12.50' LT.	722.5 (E/P)
72	8+58.87	12.50' LT.	722.5 (E/P)
73	8+73.11	12.50' RT.	723.9 (T/RP)
74	8+73.11	12.50' LT.	723.3
75	9+09.84	12.50' RT.	724.6 (T/RP)
76	9+34.84	37.39' RT.	724.63 (M.E.)
77	9+66.73	12.50' LT.	723.35 (M.E.)
78	10+26.74	13.50' LT.	724.1 (T/RP)
79	10+41.92	13.50' LT.	724.4
80	10+55.64	34.55' LT.	724.8
81	10+54.80	36.46' LT.	724.8
82	10+48.21	39.02' LT.	724.6
83	10+36.31	33.77' LT.	724.45
84	10+32.68	42.01' LT.	724.3
85	10+58.19	13.50' RT.	724.95 (T/RP)
86	10+82.35	13.50' RT.	725.2 (T/RP)
87	10+99.20	13.50' RT.	725.3 (T/RP)
88	11+06.90	45.53' LT.	725.5 (T/RP)
89	10+90.70	42.15' LT.	725.3 (T/RP)
90	10+85.88	35.72' LT.	725.2 (T/RP)
91	10+89.97	28.31' LT.	725.2 (T/RP)
92	11+11.32	13.51' LT.	724.9 (T/DC)
93	11+16.49	18.51' LT.	725.0 (T/DC)
94	11+16.49	31.50' LT.	725.7 (T/RP)
95	11+65.83	31.50' LT.	725.2 (T/RP)
96	11+65.83	13.50' RT.	724.9 (T/RP)
97	13+22.87	31.50' LT.	725.7 (T/RP)
98	13+22.87	18.57' LT.	725.45 (T/RP)
99	13+28.40	13.50' LT.	725.4 (T/RP)
100	13+91.39	13.50' LT.	725.6 (T/RP)
101	13+91.39	13.50' RT.	725.7 (T/RP)
102	13+98.68	13.50' LT.	725.5 (T/RP)
103	13+98.68	13.50' RT.	725.6 (T/RP)
104	14+22.52	13.50' LT.	725.4 (T/RP)
105	14+28.65	18.65' LT.	725.5 (T/RP)
106	14+28.65	31.50' LT.	725.7 (T/RP)
107	14+64.75	31.50' LT.	725.7 (T/RP)
108	14+64.75	13.50' RT.	725.9 (T/RP)
109	15+31.05	31.50' LT.	726.2 (T/DC)
110	15+31.05	18.50' LT.	726.0 (T/DC)
111	15+36.05	13.50' LT.	725.9 (T/DC)
112	16+07.99	13.50' LT.	726.4 (T/RP)
113	16+07.99	13.50' RT.	726.5 (T/RP)
114	16+34.92	13.50' LT.	725.8 (T/RP)
115	16+34.92	13.50' RT.	725.9 (T/RP)
116	18+89.34	13.50' LT.	726.0 (T/RP)
117	18+89.34	13.50' RT.	725.8 (T/RP)
118	19+68.04	13.50' LT.	724.8 (T/RP)
119	19+68.04	13.50' RT.	724.8 (T/RP)
120	20+56.52	13.50' LT.	724.95 (T/RP)
121	20+56.52	13.50' RT.	724.95 (T/RP)
122	20+92.56	13.50' RT.	725.3 (T/RP)
123	21+08.67	13.50' LT.	724.8 (T/RP)

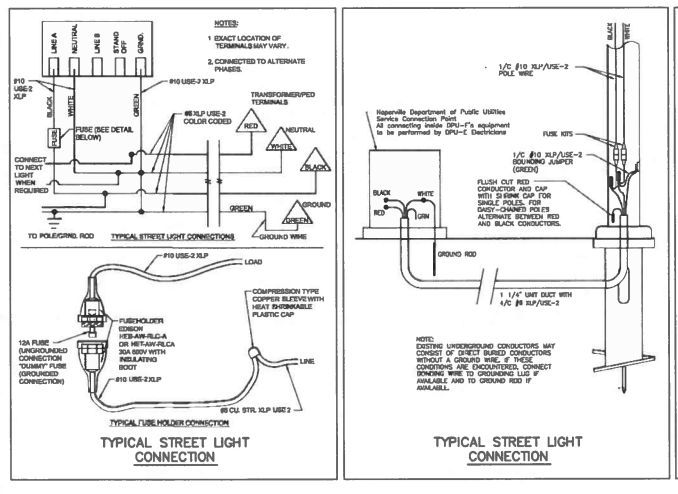

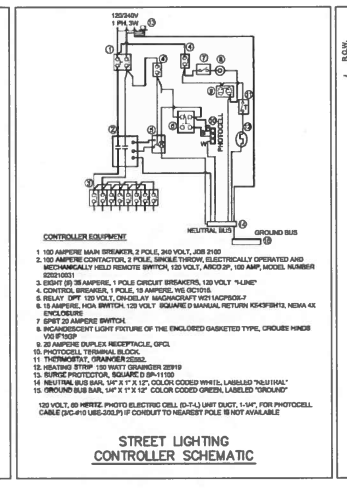

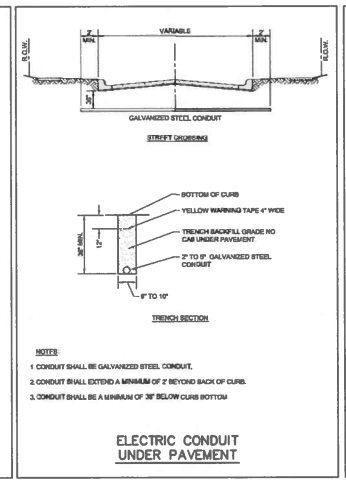

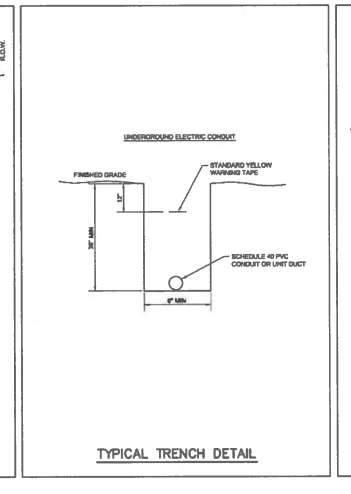

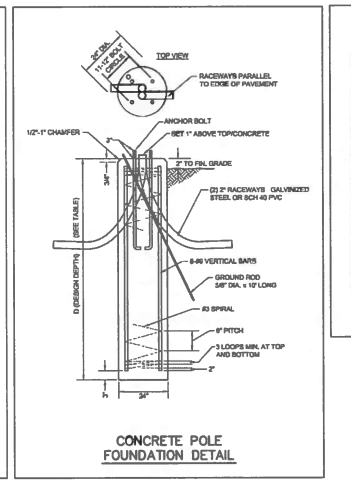

FOUNDATION DESIGN TABLE

TYPE OF SOIL	TYPICAL FOUNDATION DEPTH		REINFORCEMENT IN FOUNDATION			
	SINGLE ARM D	TWIN ARM D	SINGLE ARM		TWIN ARM	
			VERT. BARS	SPIRAL	VERT. BARS	SPIRAL
SOFT CLAY	13'	15'	8 #6 x 12'-6"	#3 x 12'2"	8 #6 x 14'-3"	#3 x 141'
MEDIUM CLAY	9'-6"	10'-9"	8 #6 x 10'-6"	#3 x 90'	8 #6 x 10'-0"	#3 x 100'
STIFF CLAY	7'	8'	8 #6 x 8'-6"	#3 x 66'	8 #6 x 7'-6"	#3 x 76'
LOOSE SAND	9'	10'	8 #6 x 8-6"	#3 x 88'	8 #6 x 9-6"	#3 x 94'
MEDIUM SAND	8'-3'	9'	8 #6 x 8'-0"	#3 x 78'	8 #6 x 8'-6"	#3 x 88'
DENSE SAND	7'-9"	9'	8 #6 x 7'-6"	#3 x 73'	8 #6 x 8'-0"	#3 x 88'
ROCK OR SOLID/FIED SLAG	5'	5'	NONE	NONE	NONE	NONE

POLE FOUNDATION DETAIL

*T/C ELEVATIONS ARE FOR TOP OF B-6.12 CURB, UNLESS OTHERWISE NOTED AS FOLLOWS:

T/DC – INDICATES TOP OF DEPRESSED CURB
T/RP – INDICATES TOP OF REVERSED PITCH CURB
M.E. – INDICATES MATCH EXISTING
E/P – INDICATES EDGE OF PAVEMENT

PREPARED FOR:
HARBOR RETIREMENT ASSOCIATES
1440 HIGHWAY A1A
VERO BEACH, FLORIDA 32963

PREPARED BY:
CEMCON, Ltd.
Consulting Engineers, Land Surveyors & Planners
2280 White Oak Circle, Suite 100
Aurora, Illinois 60502-9675
Ph: 630.862.2100 Fax: 630.862.2199
E-Mail: cadd@cemcon.com Website: www.cemcon.com

REVISIONS

NO.	DATE	DESCRIPTION	NO.	DATE	DESCRIPTION

GEOMETRIC – LIGHTING AND PARKING LOT SIGNAGE PLAN
HARBORCHASE OF LONG GROVE

FILE NAME: OVR GEO	DSGN. BY: KMM	JOB NO.: 814.003	FLD. BK./PG.: ---	SHEET NO. 9 of 20
DIR: 814003	DRN. BY: JGC	DATE: 10-10-14	SCALE: 1" = N.T.S.	

PLOT FILE CREATED: 10/9/2014 10:59 AM BY: JEFF CEBULA DRAWING LAST SAVED: 10/9/2014 9:48 AM BY: JEFF DRAWING PATH: P:\814003\DWG\ENG\DRAWINGS\FINAL DRAFTING\OVR GEO.DWG

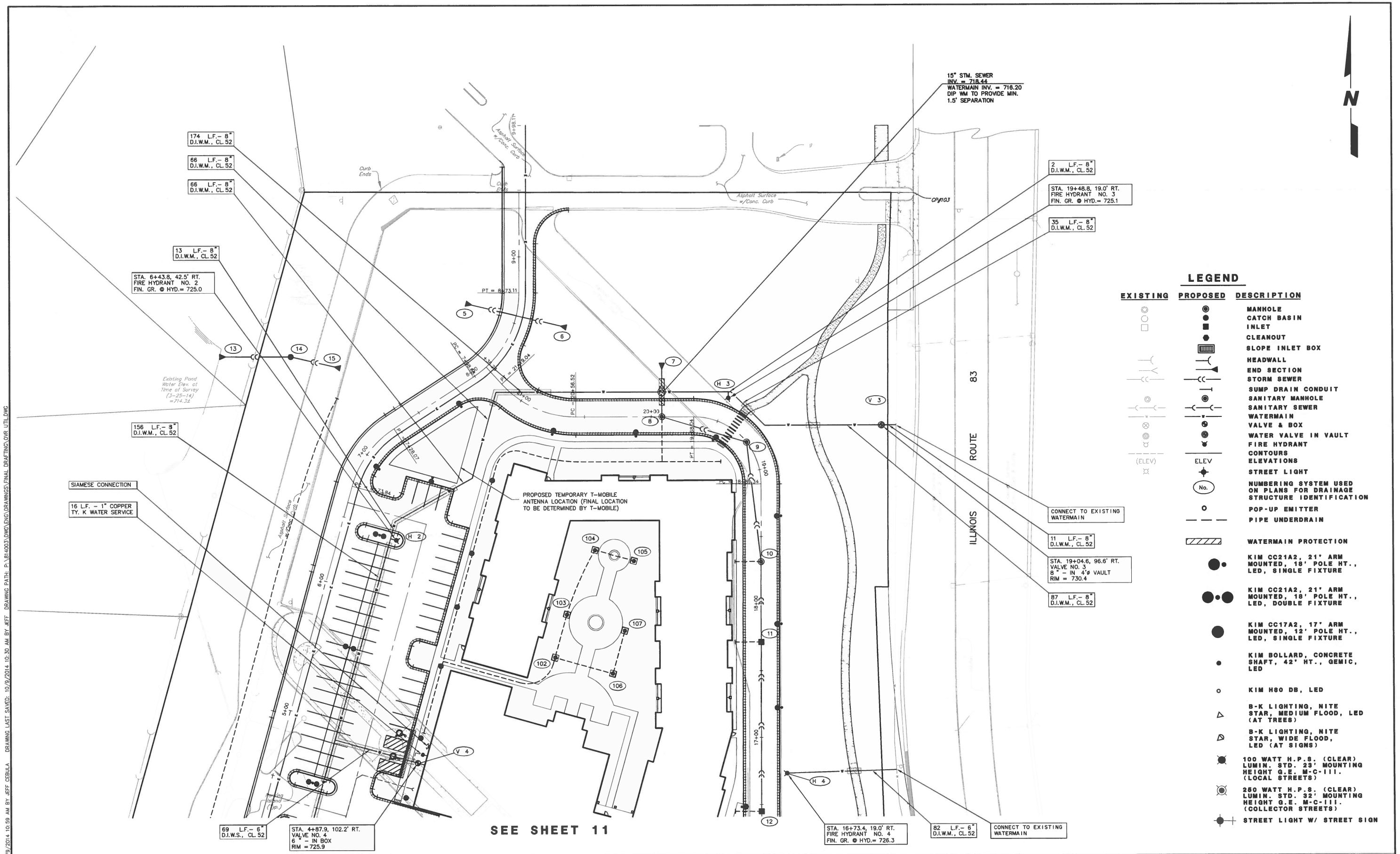

LEGEND

EXISTING	PROPOSED	DESCRIPTION
		MANHOLE
		CATCH BASIN
		INLET
		CLEANOUT
		SLOPE INLET BOX
		HEADWALL
		END SECTION
		STORM SEWER
		SUMP DRAIN CONDUIT
		SANITARY MANHOLE
		SANITARY SEWER
		WATERMAIN
		VALVE & BOX
		WATER VALVE IN VAULT
		FIRE HYDRANT
		CONTOURS
(ELEV)	ELEV	ELEVATIONS
		STREET LIGHT
	No.	NUMBERING SYSTEM USED ON PLANS FOR DRAINAGE STRUCTURE IDENTIFICATION
		POP-UP EMITTER
		PIPE UNDERDRAIN
		WATERMAIN PROTECTION
		KIM CC21A2, 21' ARM MOUNTED, 18' POLE HT., LED, SINGLE FIXTURE
		KIM CC21A2, 21' ARM MOUNTED, 18' POLE HT., LED, DOUBLE FIXTURE
		KIM CC17A2, 17' ARM MOUNTED, 12' POLE HT., LED, SINGLE FIXTURE
		KIM BOLLARD, CONCRETE SHAFT, 42' HT., GEMIC, LED
		KIM H60 DB, LED
		B-K LIGHTING, NITE STAR, MEDIUM FLOOD, LED (AT TREES)
		B-K LIGHTING, NITE STAR, WIDE FLOOD, LED (AT SIGNS)
		100 WATT H.P.S. (CLEAR) LUMIN. STD. 23' MOUNTING HEIGHT G.E. M-C-III. (LOCAL STREETS)
		250 WATT H.P.S. (CLEAR) LUMIN. STD. 32' MOUNTING HEIGHT G.E. M-C-III. (COLLECTOR STREETS)
		STREET LIGHT W/ STREET SIGN

PREPARED FOR:
HARBOR RETIREMENT ASSOCIATES
1440 HIGHWAY A1A
VERO BEACH, FLORIDA 32963

PREPARED BY:
CEMCON, Ltd.
Consulting Engineers, Land Surveyors & Planners
2280 White Oak Circle, Suite 100
Aurora, Illinois 60502-9675
Ph: 630.862.2100 Fax: 630.862.2199
E-Mail: cadd@cemcon.com Website: www.cemcon.com

REVISIONS

NO.	DATE	DESCRIPTION	NO.	DATE	DESCRIPTION

OVERALL UTILITY PLAN

HARBORCHASE OF LONG GROVE

FILE NAME: OVR UTIL	DSGN. BY: KMM	JOB NO.: 814.003	FLD. BK./PG.: ---	SHEET NO. 10 of 20
DIR: 814003	DRN. BY: JGC	DATE: 10-10-14	SCALE: 1" = 30'	

PLOT FILE CREATED: 10/9/2014 10:59 AM BY JEFF CEBULA DRAWING LAST SAVED: 10/9/2014 10:30 AM BY JEFF DRAWING PATH: P:\814003\DWG\ENG\DRAWINGS\FINAL DRAFTING\OVR UTIL.DWG

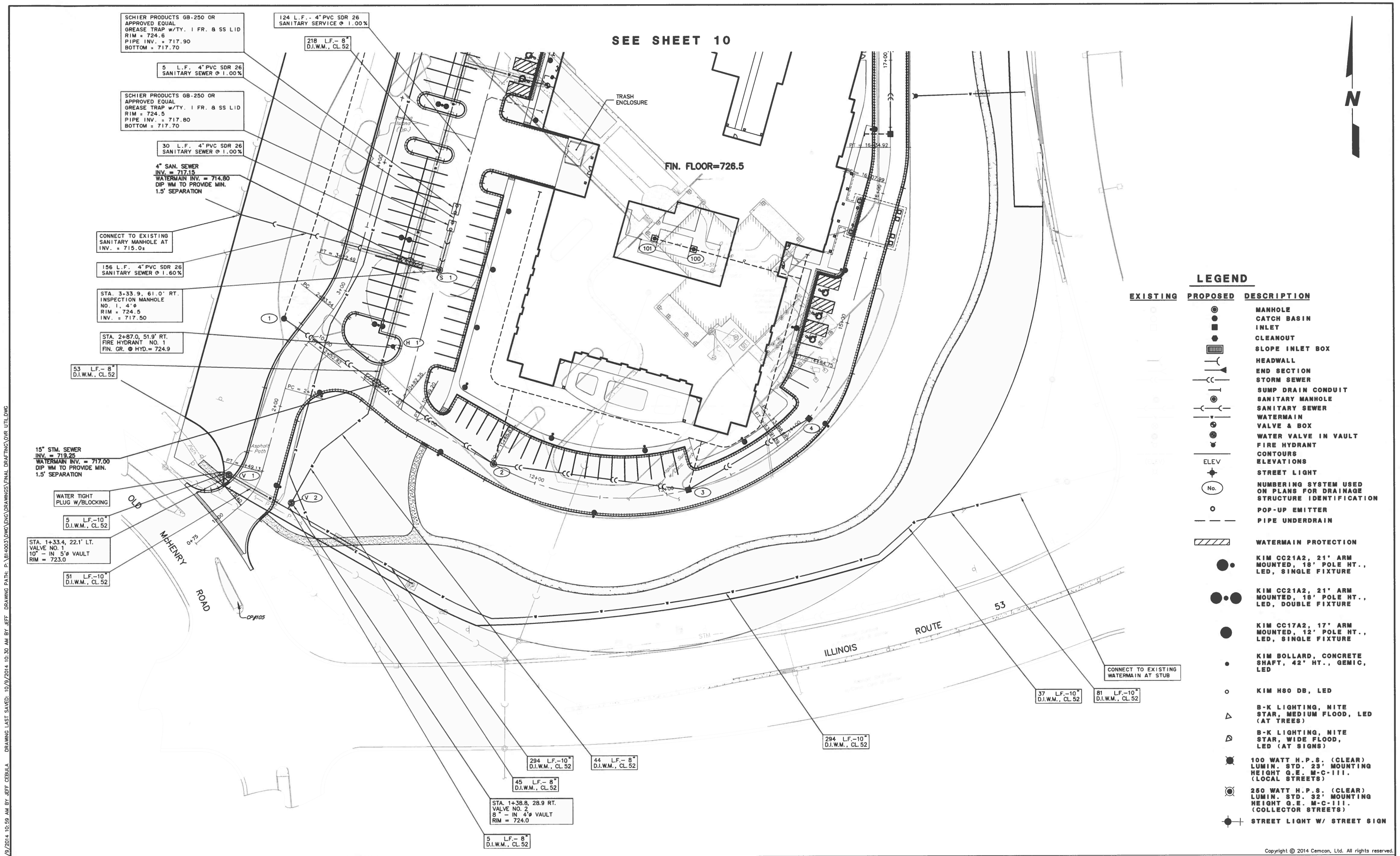

LEGEND

EXISTING	PROPOSED	DESCRIPTION
		MANHOLE
		CATCH BASIN
		INLET
		CLEANOUT
		SLOPE INLET BOX
		HEADWALL
		END SECTION
		STORM SEWER
		SUMP DRAIN CONDUIT
		SANITARY MANHOLE
		SANITARY SEWER
		WATERMAIN
		VALVE & BOX
		WATER VALVE IN VAULT
		FIRE HYDRANT
		CONTOURS
ELEV		ELEVATIONS
		STREET LIGHT
	No.	NUMBERING SYSTEM USED ON PLANS FOR DRAINAGE STRUCTURE IDENTIFICATION
		POP-UP EMITTER
		PIPE UNDERDRAIN
		WATERMAIN PROTECTION
		KIM CC21A2, 21' ARM MOUNTED, 18' POLE HT., LED, SINGLE FIXTURE
		KIM CC21A2, 21' ARM MOUNTED, 18' POLE HT., LED, DOUBLE FIXTURE
		KIM CC17A2, 17' ARM MOUNTED, 12' POLE HT., LED, SINGLE FIXTURE
		KIM BOLLARD, CONCRETE SHAFT, 42" HT., GEMIC, LED
		KIM H80 DB, LED
		B-K LIGHTING, NITE STAR, MEDIUM FLOOD, LED (AT TREES)
		B-K LIGHTING, NITE STAR, WIDE FLOOD, LED (AT SIGNS)
		100 WATT H.P.S. (CLEAR) LUMIN. STD. 23' MOUNTING HEIGHT G.E. M-C-III. (LOCAL STREETS)
		250 WATT H.P.S. (CLEAR) LUMIN. STD. 32' MOUNTING HEIGHT G.E. M-C-III. (COLLECTOR STREETS)
		STREET LIGHT W/ STREET SIGN

Copyright © 2014 Cemcon, Ltd. All rights reserved.

PREPARED FOR:
HARBOR RETIREMENT ASSOCIATES
1440 HIGHWAY A1A
VERO BEACH, FLORIDA 32963

PREPARED BY:
CEMCON, Ltd.
Consulting Engineers, Land Surveyors & Planners
2280 White Oak Circle, Suite 100
Aurora, Illinois 60502-9675
Ph: 630.862.2100 Fax: 630.862.2199
E-Mail: cadd@cemcon.com Website: www.cemcon.com

REVISIONS

NO.	DATE	DESCRIPTION	NO.	DATE	DESCRIPTION

OVERALL UTILITY PLAN

HARBORCHASE OF LONG GROVE

FILE NAME: OVR UTIL	DSGN. BY: KMM	JOB NO.: 814.003	FLD. BK./PG.: ---	SHEET NO. 11 of 20
DIR: 814003	DRN. BY: JGC	DATE: 10-10-14	SCALE: 1" = 30'	

PLOT FILE CREATED: 10/9/2014 10:59 AM BY JEFF CEBULA DRAWING LAST SAVED: 10/9/2014 10:30 AM BY JEFF DRAWING PATH: P:\814003\DWG\ENG\DRAWINGS\FINAL DRAFTING\OVR UTIL.DWG

STORMWATER POLLUTION PREVENTION PLAN

SEDIMENT AND EROSION CONTROL DURING CONSTRUCTION

STANDARDS:

THE FOLLOWING PUBLICATIONS WILL BE USED AS A GUIDE FOR THE IMPLEMENTATION OF SOIL EROSION AND SEDIMENT CONTROL:

ILLINOIS URBAN MANUAL STANDARDS AND SPECIFICATIONS (FEBRUARY 2002).

VILLAGE OF LONG GROVE STANDARD SPECIFICATIONS AND VILLAGE OF LONG GROVE STANDARD DETAILS.

REQUIREMENTS:

1. SEDIMENT AND EROSION CONTROLS SPECIFIED ON THE PLANS WILL BE FUNCTIONAL BEFORE ANY EARTHWORK OPERATIONS COMMENCE OR BEFORE LAND IS OTHERWISE DISTURBED ON THE SITE.
2. STOCKPILES OF EARTH MATERIAL WILL BE PLACED AT LOCATIONS AS INDICATED ON THE PLANS. A SILT FENCE WILL BE PLACED AROUND THE BASE OF THE STOCKPILE WHERE INDICATED. STOCKPILES OF SOIL SHALL NOT BE LOCATED IN SPECIAL MANAGEMENT AREAS.
3. SHOULD THE VOLUME, VELOCITY, SEDIMENT LOAD, OR PEAK FLOW RATES OF STORMWATER RUNOFF TEMPORARILY INCREASE DURING CONSTRUCTION, THEN ADDITIONAL MEASURES TO PROTECT ADJACENT PROPERTIES AND SPECIAL MANAGEMENT AREAS DOWNSTREAM SHALL BE UNDERTAKEN.
4. STORM SEWER INLETS SHALL BE PROTECTED BY SEDIMENT TRAPS OR FILTER CONTROL DEVICES FOLLOWING INSTALLATION.
5. THE SURFACE OF STRIPPED AREAS SHALL BE PERMANENTLY OR TEMPORARILY PROTECTED FROM SOIL EROSION WITHIN 15 DAYS AFTER FINAL GRADE IS REACHED. STRIPPED AREAS NOT AT FINAL GRADE THAT WILL REMAIN UNDISTURBED FOR MORE THAN 15 DAYS AFTER INITIAL DISTURBANCE SHALL BE PROTECTED FROM EROSION. TEMPORARY SEDIMENT AND EROSION CONTROL MEASURES SHALL BE MAINTAINED CONTINUOUSLY UNTIL PERMANENT COVER IS ESTABLISHED.
6. WATER PUMPED OR OTHERWISE DISCHARGED FROM THE SITE DURING CONSTRUCTION DEWATERING WILL BE FILTERED.
7. VEHICULAR ACCESS TO THE SITE SHALL BE RESTRICTED TO A CONSTRUCTION ENTRANCE. SAID CONSRUCTION ENTRANCE SHALL BE INSTALLED BEFORE ANY CONSTRUCTION BEGINS.
8. THE DESIGNATED CONSTRUCTION ACCESS ROAD WILL BE MAINTAINED WITH CONNECTION TO ADJACENT PUBLIC ROADWAY. THIS ACCESS ROAD WILL BE UTILIZED AS A VEHICLE WASH DOWN AREA TO PREVENT A DEPOSIT OF SOIL FROM BEING TRACKED ONTO PUBLIC OR PRIVATE ROADWAYS. ADJACENT ROADWAYS WILL BE SWEPT OR CLEANED OF SOIL, MUD, DEBRIS OR EXTRANEOUS MATERIALS AS NECESSARY BEFORE THE END OF EACH WORKDAY.
9. ALL CONTROL MEASURES NECESSARY WILL BE KEPT OPERATIONAL AND MAINTAINED CONTINUOUSLY THROUGH THE PERIOD OF LAND DISTURBANCE UNTIL PERMANENT EROSION CONTROL IS OPERATIONAL.
10. IF A STOCKPILE IS TO REMAIN IN PLACE FOR MORE THAN THREE DAYS, THEN SEDIMENT AND EROSION CONTROL SHALL BE PROVIDED FOR SUCH STOCKPILE.

THIS PLAN HAS BEEN PREPARED TO COMPLY WITH THE PROVISIONS OF THE NPDES GENERAL PERMIT NUMBER ILR10, ISSUED BY THE ILLINOIS ENVIRONMENTAL PROTECTION AGENCY FOR STORMWATER DISCHARGES FROM CONSTRUCTION SITE ACTIVITIES.

THE PERMITEE MUST COMPLY WITH ALL CONDITIONS OF THE GENERAL PERMIT. ANY PERMIT NO-COMPLIANCE CONSTITUTES A VIOLATION OF THE ILLINOIS ENVIRONMENTAL PROTECTION ACT AND THE CLEAN WATER ACT AND IS GROUNDS FOR ENFORCEMENT ACTION; FOR PERMIT TERMINATION, REVOCATION AND REISSUANCE, OR MODIFICATION, OR FOR DENIAL OF A PERMIT RENEWAL APPLICATION.

1. SITE DESCRIPTION

A. THE FOLLOWING IS A DESCRIPTION OF THE CONSTRUCTION ACTIVITY WHICH IS THE SUBJECT OF THIS PLAN:

THE CONSTRUCTION OF SITE INFRASTRUCTURE IMPROVEMENTS TO SERVE A COMMERCIAL DEVELOPMENT, INCLUDING MASS GRADING OF THE SITE, STORM SEWERS AND SERVICE, SANITARY SERVICE, WATER MAINS AND SERVICE, STREET PAVEMENTS, SIDEWALKS, STREET LIGHTING, EROSION AND SEDIMENTATION CONTROL MEASURES, AND VEGETATIVE STABILIZATION AND BEST MANAGEMENT PRACTICES.

B. THE FOLLOWING IS A DESCRIPTION OF THE INTENDED SEQUENCE OF MAJOR ACTIVITIES WHICH WILL DISTURB SOILS FOR MAJOR PORTIONS OF THE CONSTRUCTION SITE:

(1.) EROSION AND SEDIMENTATION CONTROL MEASURES SUCH AS EROSION CONTROL FENCE, DITCH CHECKS, RIP RAP DITCH CHECKS, TEMPORARY SEEDING, ETC.
(2.) MASS GRADING AND EXCAVATION
(3.) UNDERGROUND UTILITIES
(4.) FINE GRADING AND CONSTRUCTION OF STREET PAVEMENT
(5.) TOPSOIL RESPREAD AND VEGETATIVE STABILIZATION

C. THE TOTAL AREA OF THE PROJECT IS ESTIMATED TO BE APPROXIMATELY 9.7 ACRES. THE TOTAL AREA OF THE PROJECT ESTIMATED TO BE DISTURBED BY EXCAVATION, GRADING, OR OTHER ACTIVITIES IS APPROXIMATELY 9.7 ACRES.

D. THE ESTIMATED RUNOFF CURVE NUMBER OF THE PROJECT SITE AFTER CONSTRUCTION ACTIVITIES IS TO BE 86.5. INFORMATION DESCRIBING THE SOILS AT THE SITE IS CONTAINED IN THE SOILS REPORTS FOR THE PROJECT ON FILE WITH THE OWNER/DEVELOPER.

E. THESE PLAN DOCUMENTS CONTAIN SITE MAP(S) INDICATING DRAINAGE PATTERNS AND APPROXIMATE SLOPES ANTICIPATED AFTER MAJOR GRADING ACTIVITIES, AREAS OF MAJOR SOIL DISTURBANCE, THE LOCATION OF MAJOR STRUCTURAL AND NON-STRUCTURAL CONTROLS IDENTIFIED IN THE PLAN, THE LOCATION OF AREAS WHERE STABILIZATION PRACTICES ARE EXPECTED TO OCCUR, SURFACE WATERS (INCLUDING WETLAND), AND LOCATIONS WHERE STORM WATER IS DISCHARGED TO A SURFACE WATER.

F. THE IMMEDIATE RECEIVING WATER FOR THE DEVELOPMENT IS AN EXISTING STORMWATER MANAGEMENT FACILITY TO THE WEST.

2. CONTROLS

THIS SECTION OF THE PLAN ADDRESSES THE VARIOUS CONTROLS THAT WILL BE IMPLEMENTED FOR EACH OF THE MAJOR CONSTRUCTION ACTIVITIES DESCRIBED IN 1.B ABOVE. FOR EACH MEASURE DISCUSSED, THE CONTRACTORS AND SUB-CONTRACTOR WILL BE RESPONSIBLE FOR ITS IMPLEMENTATION AS INDICATED. EACH SUCH CONTRACTOR OR SUB-CONTRACTOR MUST SIGN THE REQUIRED CERTIFICATION ON THIS PLAN.

A. EROSION AND SEDIMENT CONTROLS

(1.) STABILIZATION PRACTICES. PROVIDED BELOW IS A DESCRIPTION OF INTERIM AND PERMANENT STABILIZATION PRACTICES, INCLUDING SITE-SPECIFIC SCHEDULING OF THE IMPLEMENTATION OF THE PRACTICES. SITE PLANS WILL ENSURE THAT EXISTING VEGETATION IS PRESERVED WHERE ATTAINABLE AND DISTURBED PORTIONS OF THE SITE WILL BE STABILIZED. EXCEPT AS PROVIDED IN 2.A.(1).(A) AND 2.B. STABILIZATION MEASURES SHALL BE INITIATED AS SOON AS PRACTICABLE IN PORTIONS OF THE SITE WHERE CONSTRUCTION ACTIVITIES HAVE TEMPORARILY OR PERMANENTLY CEASED, BUT IN NO CASE MORE THAN 14 DAYS AFTER THE CONSTRUCTION ACTIVITY IN THAT PORTION OF THE SITE HAS TEMPORARILY OR PERMANENTLY CEASED AND WHERE THE CONSTRUCTION ACTIVITY WILL NOT OCCUR FOR A PERIOD OF 21 OR MORE CALENDAR DAYS.

(A.) WHERE THE INITIATION OF STABILIZATION MEASURES BY THE 14TH DAY AFTER CONSTRUCTION ACTIVITY TEMPORARILY OR PERMANENTLY CEASES IS PRECLUDED BY SNOW COVER, STABILIZATION MEASURES SHALL BE INITIATED AS SOON AS PRACTICABLE THEREAFTER.

(B.) WHERE CONSTRUCTION ACTIVITY WILL RESUME ON A PORTION OF THE SITE WITHIN 21 DAYS FROM WHEN THE ACTIVITIES CEASED (E.G. THE TOTAL TIME PERIOD THAT CONSTRUCTION ACTIVITY IS TEMPORARILY CEASED IS LESS THAN 21 DAYS) THEN STABILIZATION MEASURES DO NOT HAVE TO BE INITIATED ON THAT PORTION OF THE SITE BY THE 14TH DAY AFTER CONSTRUCTION ACTIVITY TEMPORARILY CEASED.

THE FOLLOWING INTERIM AND PERMANENT STABILIZATION PRACTICES, AS A MINIMUM, WILL BE IMPLEMENTED TO STABILIZE THE DISTURBED AREA OF THE SITE: *

HYDROSEED, MULCH, PLUGS, AND LANDSCAPING
RIP-RAP
EROSION CONTROL BLANKET

(2.) STRUCTURAL PRACTICES. PROVIDED BELOW IS A DESCRIPTION OF STRUCTURAL PRACTICES THAT WILL BE IMPLEMENTED, TO THE DEGREE ATTAINABLE, TO DIVERT FLOWS FROM EXPOSED SOILS, STORE FLOWS OR OTHERWISE LIMIT RUNOFF AND THE DISCHARGE OF POLLUTANTS FROM EXPOSED AREAS OF THE SITE. THE INSTALLATION OF THESE DEVICES MAY BE SUBJECT TO SECTION 404 OF THE CLEAN WATER ACT. *

SILT FENCE
DITCH CHECK
STABILIZED CONSTRUCTION ENTRANCE

(3.) BEST MANAGEMENT PRACTICES. PROVIDED BELOW IS A DESCRIPTION OF THE BEST MANAGEMENT PRACTICES THAT WILL BE IMPLEMENTED, TO THE DEGREE ATTAINABLE, TO REDUCE SUSPENDED SOLIDS, TURBIDITY, SILTATION, AND POLLUTION IN STORMWATER RUNOFF. THE INSTALLATION OF THESE DEVICES MAY BE SUBJECT TO SECTION 404 OF THE CLEAN WATER ACT. *

STORMWATER MANAGEMENT FACILITIES WITH PERMANENT POOL
TEMPORARY RETENTION FOR 0.5 INCH RAINFALL
VEGETATED SWALES
MESIC PRAIRIE UPPER SLOPE PLANTINGS
WET PRAIRIE LOWER SLOPE PLANTINGS
SHALLOW MARSH BASIN BOTTOM PLANTINGS
LANDSCAPED BUFFERS

B. STORMWATER MANAGEMENT

PROVIDED BELOW IS A DESCRIPTION OF MEASURES THAT WILL BE INSTALLED DURING THE CONSTRUCTION PROCESS TO CONTROL POLLUTANTS IN STORMWATER DISCHARGE THAT WILL OCCUR AFTER CONSTRUCTION OPERATIONS HAVE BEEN COMPLETED. THE INSTALLATION OF THESE DEVICES MAY BE SUBJECT TO SECTION 404 OF THE CLEAN WATER ACT.

(1.) THE PRACTICES SELECTED FOR IMPLEMENTATION WERE DETERMINED ON THE BASIS OF THE TECHNICAL GUIDANCE IN SECTION 10-300 (DESIGN CONSIDERATIONS) IN CHAPTER 10 (EROSION AND SEDIMENTATION CONTROL) OF THE ILLINOIS DEPARTMENT OF TRANSPORTATION DRAINAGE MANUAL AND THE NRCS ILLINOIS URBAN MANUAL (JANUARY 2002 VERSION).

(2.) VELOCITY DISSIPATION DEVICES WILL BE PLACED AT DISCHARGE LOCATIONS AND ALONG THE LENGTH OF ANY OUTFALL CHANNEL AS NECESSARY TO PROVIDE A NON-EROSIVE VELOCITY FLOW FROM THE STRUCTURE TO A WATER COURSE SO THAT THE NATURAL PHYSICAL AND BIOLOGICAL CHARACTERISTICS AND FUNCTIONS ARE MAINTAINED AND PROTECTED (E.G., MAINTENANCE OF HYDRAULIC CONDITIONS, SUCH AS THE HYDROPERIOD AND HYDRODYNAMICS PRESENT PRIOR TO THE INITIATION OF CONSTRUCTION ACTIVITIES).

STORMWATER MANAGEMENT CONTROL INCLUDES: *

STORM WATER DETENTION STRUCTURES WITH PERMANENT WET BASINS
STORM WATER RETENTION STRUCTURES
FLOW ATTENUATION VIA VEGETATED SWALES AND NATURAL DEPRESSIONS
ON-SITE INFILTRATION OF RUNOFF
SEQUENTIAL STORMWATER TREATMENT
OPEN VENTILATED SWALES

C. OTHER CONTROLS

(1.) WASTE DISPOSAL. THE SOLID WASTE MATERIALS INCLUDING TRASH, CONSTRUCTION DEBRIS, EXCESS CONSTRUCTION MATERIALS, MACHINERY, TOOLS AND OTHER ITEMS WILL BE COLLECTED AND DISPOSED OFF-SITE BY THE CONTRACTOR. THE CONTRACTOR IS RESPONSIBLE TO ACQUIRE ANY PERMIT REQUIRED FOR SUCH DISPOSAL. BURNING ON THE SITE WILL NOT BE PERMITTED. SOLID MATERIALS, INCLUDING BUILDING MATERIALS, SHALL NOT BE DISCHARGED INTO WATERS OF THE STATE, EXCEPT AS AUTHORIZED BY A SECTION 404 PERMIT.

(2.) THE PROVISIONS OF THIS PLAN SHALL ENSURE AND DEMONSTRATE COMPLIANCE WITH APPLICABLE STATE AND/OR LOCAL WASTE DISPOSAL, SANITARY SEWER OR SEPTIC SYSTEM REGULATIONS.

D. APPROVED STATE OR LOCAL PLANS

THE MANAGEMENT PRACTICES, CONTROLS AND PROVISIONS CONTAINED IN THIS PLAN WILL BE IN ACCORDANCE WITH IDOT SPECIFICATIONS, WHICH ARE AT LEAST AS PROTECTIVE AS THE REQUIREMENTS CONTAINED IN THE ILLINOIS ENVIRONMENTAL PROTECTION AGENCY'S ILLINOIS URBAN MANUAL, 2002. REQUIREMENTS SPECIFIED IN SEDIMENT AND EROSION SITE PLANS OR SITE PERMITS OR STORM WATER REQUIREMENTS SPECIFIED IN SEDIMENT AND EROSION SITE PLANS OR SITE PERMITS OR STORM WATER MANAGEMENT SITE PLANS OR SITE PERMITS APPROVED BY LOCAL OFFICIALS THAT ARE APPLICABLE TO PROTECTING SURFACE WATER RESOURCES ARE, UPON SUBMITTAL OF AN NOI TO BE AUTHORIZED TO DISCHARGE UNDER PERMIT ILR10 INCORPORATED BY REFERENCE AND ARE ENFORCEABLE UNDER THIS PERMIT EVEN IF THEY ARE NOT SPECIFICALLY INCLUDED IN THE PLAN.

*REFER TO LISTED PLAN SHEETS FOR SPECIFIC MATERIALS AND CONSTRUCTION DETAILS

PLAN SHEET NAMES:
CONSTRUCTION SPECIFICATIONS
STORMWATER POLLUTION PREVENTION PLAN
OVERALL SOIL EROSION, SEDIMENTATION CONTROL PLAN AND DETAILS
DRAINAGE AND GRADING PLANS
DRAINAGE STRUCTURE DETAILS

3. MAINTENANCE

THE EXCAVATING CONTRACTOR SHALL BE RESPONSIBLE FOR THE INITIAL CONSTRUCTION OF THE EROSION CONTROL MEASURES SHOWN IN THE PLAN, AND SHALL BE RESPONSIBLE FOR THE MAINTENANCE OF SAID FACILITIES UNTIL THE COMPLETION OF FINAL GRADING OPERATIONS AFTER CONSTRUCTION OF THE IMPROVEMENTS. THE CONTRACTOR SHALL REQUEST IN WRITING A RELEASE FROM THE OWNER FOR MAINTENANCE OF THE SITE UPON COMPLETION OF THE WORK. THE OWNER SHALL ISSUE SAID RELEASE WITHIN 15 DAYS OF THE CONTRACTOR'S REQUEST PROVIDING THE CONTRACTOR HAS COMPLETED ALL WORK REQUIRED UNDER THE CONTRACT. THE CONTRACTOR'S EROSION CONTROL MAINTENANCE RESPONSIBILITIES SHALL BE EXCLUSIVE OF THE CONSTRUCTION WARRANTY AND/OR GUARANTEE PERIOD.

THE FOLLOWING IS A DESCRIPTION OF PROCEDURES THAT WILL BE USED TO MAINTAIN IN GOOD AND EFFECTIVE OPERATING CONDITIONS, VEGETATION, EROSION AND SEDIMENT CONTROL MEASURES AND OTHER PROTECTIVE MEASURES IDENTIFIED IN THIS PLAN.

A. STABILIZED CONSTRUCTION ENTRANCE: THE ENTRANCE SHALL BE MAINTAINED TO PREVENT TRACKING OF SEDIMENT ONTO PUBLIC STREETS. THIS WILL BE DONE BY TOP DRESSING WITH ADDITIONAL STONES, REMOVE AND REPLACE TOP LAYER OF STONES OR WASHING THE ENTRANCE. THE SEDIMENT WASHED ONTO THE PUBLIC RIGHT-OF-WAY SHALL BE REMOVED IMMEDIATELY.

B. VEGETATIVE EROSION CONTROL MEASURES: THE VEGETATIVE GROWTH OF TEMPORARY AND PERMANENT SEEDING, SODDING, VEGETATIVE CHANNELS, VEGETATIVE FILTER, ETC. SHALL BE MAINTAINED PERIODICALLY AND SUPPLY ADEQUATE WATERING AND FERTILIZER. THE VEGETATIVE COVER SHALL BE REMOVED AND RESEEDED AS NECESSARY.

C. SILT FILTER FENCE: THE DAMAGED SILT FILTER FENCE SHALL BE INSTALLED, MAINTAINED, RESTORED, OR REPLACED TO MEET THE STANDARDS INCLUDED HEREIN.

D. INLET FILTER BASKET: THE FILTER BASKETS SHALL BE INSPECTED FREQUENTLY AND SHALL BE CLEANED, REPAIRED OR REMOVED AND REPLACED AS NEEDED.

4. INSPECTIONS

THE OWNER OR ITS DESIGNATED REPRESENTATIVE SHALL PROVIDE QUALIFIED PERSONNEL TO INSPECT DISTURBED AREAS OF THE CONSTRUCTION SITE WHICH HAVE NOT BEEN STABILIZED WITH TEMPORARY OR PERMANENT VEGETATIVE STABILIZATION, PROTECTED WITH STRUCTURAL CONTROL MEASURES, OR LOCATIONS WHERE VEHICLES ENTER OR EXIT THE SITE. SUCH INSPECTIONS SHALL BE CONDUCTED AT LEAST ONCE EVERY SEVEN (7) CALENDAR DAYS AND WITHIN 24 HOURS OF THE END OF A STORM THAT IS 0.5 INCHES OR GREATER OF EQUIVALENT SNOWFALL.

A. DISTURBED AREAS AND AREAS USED FOR STORAGE OF MATERIALS THAT ARE EXPOSED TO PRECIPITATION SHALL BE INSPECTED FOR EVIDENCE OF, OR THE POTENTIAL FOR, POLLUTANTS ENTERING THE DRAINAGE SYSTEM. EROSION AND SEDIMENT CONTROL MEASURES IDENTIFIED IN THE PLAN SHALL BE OBSERVED TO ENSURE THAT THEY ARE OPERATING CORRECTLY. WHILE DISCHARGE LOCATIONS OR POINTS ARE ACCESSIBLE, THEY SHALL BE INSPECTED TO ASCERTAIN WHETHER EROSION CONTROL MEASURES ARE EFFECTIVE IN PREVENTING SIGNIFICANT IMPACTS TO RECEIVING WATERS. LOCATIONS WHERE VEHICLES ENTER OR EXIT THE SITE SHALL BE INSPECTED FOR EVIDENCE OF OFF SITE SEDIMENT TRACKING.

B. BASED ON THE RESULTS OF THE INSPECTION, THE DESCRIPTION OF POTENTIAL POLLUTANT SOURCES IDENTIFIED IN SECTION 1 ABOVE AND POLLUTION PREVENTION MEASURES IDENTIFIED IN SECTION 2 ABOVE SHALL BE REVISED AS APPROPRIATE AS SOON AS PRACTICABLE AFTER SUCH INSPECTION. ANY CHANGES TO THIS PLAN RESULTING FROM THE REQUIRED INSPECTIONS SHALL BE IMPLEMENTED WITHIN 7 CALENDAR DAYS FOLLOWING THE INSPECTION.

C. A REPORT SUMMARIZING THE SCOPE OF THE INSPECTION, NAME(S) AND QUALIFICATIONS OF PERSONNEL MAKING THE INSPECTION, THE DATE(S) OF THE INSPECTION, MAJOR OBSERVATIONS RELATING TO THE IMPLEMENTATION OF THIS STORMWATER POLLUTION PREVENTION PLAN, AND ACTIONS TAKEN IN ACCORDANCE WITH SECTION 4.B SHALL BE MADE AND RETAINED AS PART OF THE PLAN FOR AT LEAST THREE (3) YEARS AFTER THE DATE OF THE INSPECTION. THE REPORT SHALL BE SIGNED IN ACCORDANCE WITH PART VI. G OF THE GENERAL PERMIT.

D. IF ANY VIOLATION OF THE PROVISIONS OF THIS PLAN IS IDENTIFIED DURING THE CONDUCT OF THE CONSTRUCTION WORK COVERED BY THIS PLAN, THE RESIDENT ENGINEER OR RESIDENT TECHNICIAN SHALL COMPLETE AND FILE AN "INCIDENCE OF NONCOMPLIANCE (ION_ REPORT FOR THE IDENTIFIED VIOLATION. THE RESIDENT ENGINEER OR RESIDENT TECHNICIAN SHALL USE FORMS PROVIDED BY THE ILLINOIS ENVIRONMENTAL PROTECTION AGENCY AND SHALL INCLUDE SPECIFIC INFORMATION ON THE CAUSE OF NONCOMPLIANCE, ACTIONS WHICH WERE TAKEN TO PREVENT ANY FURTHER CAUSE OF NONCOMPLIANCE, AND A STATEMENT DETAILING ANY ENVIRONMENTAL IMPACT WHICH MAY HAVE RESULTED FROM THE NONCOMPLIANCE. ALL REPORTS OF NONCOMPLIANCE SHALL BE SIGNED BY A RESPONSIBLE AUTHORITY IN ACCORDANCE WITH PART VI. G OF THE GENERAL PERMIT. THE REPORT OF NONCOMPLIANCE SHALL BE MAILED TO THE FOLLOWING ADDRESS:

ILLINOIS ENVIRONMENTAL PROTECTION AGENCY
DIVISION OF WATER POLLUTION CONTROL
ATTN: COMPLIANCE ASSURANCE SECTION
1021 NORTH GRAND EAST
POST OFFICE BOX 19276
SPRINGFIELD, ILLINOIS 62794-9276

5. NON-STORMWATER DISCHARGES

EXCEPT FOR FLOWS FROM FIRE FIGHTING ACTIVITIES, SOURCES OF NON-STORMWATER THAT MAY BE COMBINED WITH STORMWATER DISCHARGES ASSOCIATED WITH THE INDUSTRIAL ACTIVITY ADDRESSED IN THIS PLAN, ARE DESCRIBED BELOW

1. WATERMAIN FLUSHING
2. FIRE HYDRANT FLUSHING
3. WATERING FOR DUST CONTROL
4. IRRIGATION DRAINAGE FOR VEGETATIVE GROWTH FOR SEEDING, ETC.

THE POLLUTION PREVENTION MEASURES AS DESCRIBED BELOW, WILL BE IMPLEMENTED FOR NON-STORMWATER COMPONENTS OF THE DISCHARGE:

THE FIRE HYDRANT AND WATERMAIN SHALL NOT BE FLUSHED DIRECTLY ON THE EXPOSED AREA OR SUBGRADE OF THE PAVEMENT. HOSES SHALL BE USED TO DIRECT THE FLOW INTO THE STORM SEWER SYSTEM, IF AVAILABLE.

THE EROSION DUE TO IRRIGATION OF SEEDING AND DUST CONTROL SHALL BE COLLECTED AND RE-SPREAD ONSITE. TEMPORARY AND/OR PERMANENT SOIL STABILIZATION MEASURES SHALL BE IMPLEMENTED AS NECESSARY TO CONTROL FUTURE EROSION FROM AREAS PREVIOUSLY ERODED DUE TO IRRIGATION OF SEEDING AND DUST CONTROL.

ALL SITE DE-WATERING, INCLUDING PUMP DISCHARGE, MUST PASS THROUGH THE PROPER STRUCTURAL PRE-SEDIMENTATION BASINS OR EQUAL STRUCTURAL CONTROLS BEFORE LEAVING THE SITE.

6. PLAN REVIEW

THE PERMITEE SHALL MAKE PLANS AVAILABLE UPON REQUEST FROM THE ILLINOIS ENVIRONMENTAL PROTECTION AGENCY (IEPA) OR A LOCAL AGENCY APPROVING SEDIMENT AND EROSION PLANS, GRADING PLANS, OR STORM WATER MANAGEMENT PLANS; OR IN THE CASE OF A STORM SEWER DISCHARGE ASSOCIATED WITH INDUSTRIAL ACTIVITY WHICH DISCHARGES THROUGH A MUNICIPAL SEPARATE STORM SYSTEM WITH AN NPDES PERMIT, TO THE MUNICIPAL OPERATOR OF THE SYSTEM.

THE IEPA MAY NOTIFY THE PERMITEE AT ANY TIME THAT THE PLAN DOES NOT MEET ONE OR MORE OF THE MINIMUM REQUIREMENTS OF PART IV. OF THE GENERAL PERMIT. SUCH NOTIFICATION SHALL IDENTIFY THOSE PROVISIONS OF THE PERMIT WHICH ARE NOT BEING MET BY THE PLAN, AND IDENTIFY WHICH PROVISIONS OF THE PLAN REQUIRES MODIFICATIONS IN ORDER TO MEET THE MINIMUM REQUIREMENTS OF PART IV. OF THE GENERAL PERMIT. WITHIN SEVEN (7) DAYS FROM THE RECEIPT OF THE NOTIFICATION FROM THE IEPA, THE PERMITEE SHALL MAKE THE REQUIRED CHANGES TO THE PLAN AND SHALL SUBMIT TO THE IEPA A WRITTEN CERTIFICATION THAT THE REQUESTED CHANGES HAVE BEEN MADE. FAILURE TO COMPLY SHALL TERMINATE AUTHORIZATION UNDER THE GENERAL PERMIT.

7. AMENDMENTS

THE PERMITEE SHALL AMEND THE PLAN WHENEVER THERE IS A CHANGE IN DESIGN, CONSTRUCTION, OPERATION, OR MAINTENANCE, WHICH HAS SIGNIFICANT EFFECT ON THE POTENTIAL FOR THE DISCHARGE OF POLLUTANTS TO THE WATERS OF THE STATE AND WHICH HAS NOT OTHERWISE BEEN ADDRESSED IN THE PLAN OR IF THE PLAN PROVES TO BE INEFFECTIVE IN ELIMINATING OR SIGNIFICANTLY MINIMIZING POLLUTANTS FROM THE SOURCES IDENTIFIED UNDER 2. (CONTROLS) ABOVE, OR OTHERWISE ACHIEVING THE GENERAL OBJECTIVES OF CONTROLLING POLLUTANTS IN STORM WATER DISCHARGES ASSOCIATED WITH CONSTRUCTION SITE ACTIVITY. IN ADDITION, THE PLAN SHALL BE AMENDED TO IDENTIFY ANY NEW CONTRACTOR AND/OR SUBCONTRACTOR THAT WILL IMPLEMENT A MEASURE OF THE PLAN. AMENDMENTS TO THE PLAN MAY BE REVIEWED BY THE IEPA IN THE SAME MANNER AS 6. (PLAN REVIEW) ABOVE.

8. RECORDS

THE PERMITEE SHALL RETAIN COPIES OF THE PLAN AND ALL REPORTS AND NOTICES REQUIRED BY THE GENERAL PERMIT, AND RECORDS OF ALL DATA USED TO COMPLETE THE NOTICE OF INTENT TO BE COVERED BY THE GENERAL PERMIT, FOR A PERIOD OF AT LEAST THREE YEARS FROM THE DATE THAT THE SITE IS FINALLY STABILIZED. THE PERIOD MAY BE EXTENDED BY THE REQUEST OF THE IEPA AT ANY TIME.

THE PERMITEE SHALL RETAIN A COPY OF THE PLAN REQUIRED BY THE GENERAL PERMIT AT THE CONSTRUCTION SITE FROM THE DATE OF THE PROJECT INITIATION TO THE DATE OF FINAL STABILIZATION.

9. CONTRACTORS

THIS PLAN REQUIRES IDENTIFICATION FOR EACH MEASURE IN THE PLAN, THE CONTRACTOR(S) OR SUBCONTRACTOR(S) THAT WILL IMPLEMENT THE IDENTIFIED MEASURE:

CONTRACTOR(S): _____
ADDRESS: _____
PHONE: _____
MEASURES IMPLEMENTED: _____

SUB-CONTRACTOR(S): _____
ADDRESS: _____
PHONE: _____
MEASURES IMPLEMENTED: _____

SUB-CONTRACTOR(S): _____
ADDRESS: _____
PHONE: _____
MEASURES IMPLEMENTED: _____

ALL CONTRACTORS AND SUB-CONTRACTORS IDENTIFIED ABOVE SHALL SIGN THE FOLLOWING CERTIFICATION STATEMENT BEFORE CONDUCTING ANY PROFESSIONAL SERVICE AT THE IDENTIFIED SITE. SIGNATURES SHALL BE PROVIDED BY A RESPONSIBLE CORPORATE OFFICER:

FOR: HARBOR RETIREMENT ASSOCIATES

CERTIFICATION STATEMENT: I CERTIFY UNDER PENALTY OF LAW THAT I UNDERSTAND THE TERMS AND CONDITIONS OF THE GENERAL NATIONAL POLLUTANT DISCHARGE ELIMINATION SYSTEM (NPDES) PERMIT (ILR100000) THAT AUTHORIZES THE STORM WATER DISCHARGES ASSOCIATED WITH INDUSTRIAL ACTIVITY FROM THE CONSTRUCTION SITE IDENTIFIED AS PART OF THIS CERTIFICATION.

CONTRACTOR: _____
SIGNATURE: _____ DATE: _____
CONTRACTOR: _____
SIGNATURE: _____ DATE: _____
SUB-CONTRACTOR: _____
SIGNATURE: _____ DATE: _____
SUB-CONTRACTOR: _____
SIGNATURE: _____ DATE: _____
SUB-CONTRACTOR: _____
SIGNATURE: _____ DATE: _____

Copyright © 2014 Cemcon, Ltd. All rights reserved.

PREPARED FOR:
HARBOR RETIREMENT ASSOCIATES
1440 HIGHWAY A1A
VERO BEACH, FLORIDA 32963

PREPARED BY:
CEMCON, Ltd.
Consulting Engineers, Land Surveyors & Planners
2280 White Oak Circle, Suite 100
Aurora, Illinois 60502-9675
Ph: 630.862.2100 Fax: 630.862.2199
E-Mail: cadd@cemcon.com Website: www.cemcon.com

REVISIONS

NO.	DATE	DESCRIPTION	NO.	DATE	DESCRIPTION

STORMWATER POLLUTION PREVENTION PLAN
HARBORCHASE OF LONG GROVE

FILE NAME: SOILERO	DSGN. BY: KMM	JOB NO.: 814.003	FLD. BK./PG.: ---	SHEET NO. 12 of 20
DIR: 814003	DRN. BY: JGC	DATE: 10-10-14	SCALE: 1" = ---	

PLOT FILE CREATED: 10/9/2014 10:58 AM BY: JEFF CEBULA DRAWING LAST SAVED: 10/9/2014 10:29 AM BY: JEFF DRAWING PATH: P:\814003\DWG\ENG\DRAWINGS\FINAL DRAFTING\SOILERO.DWG

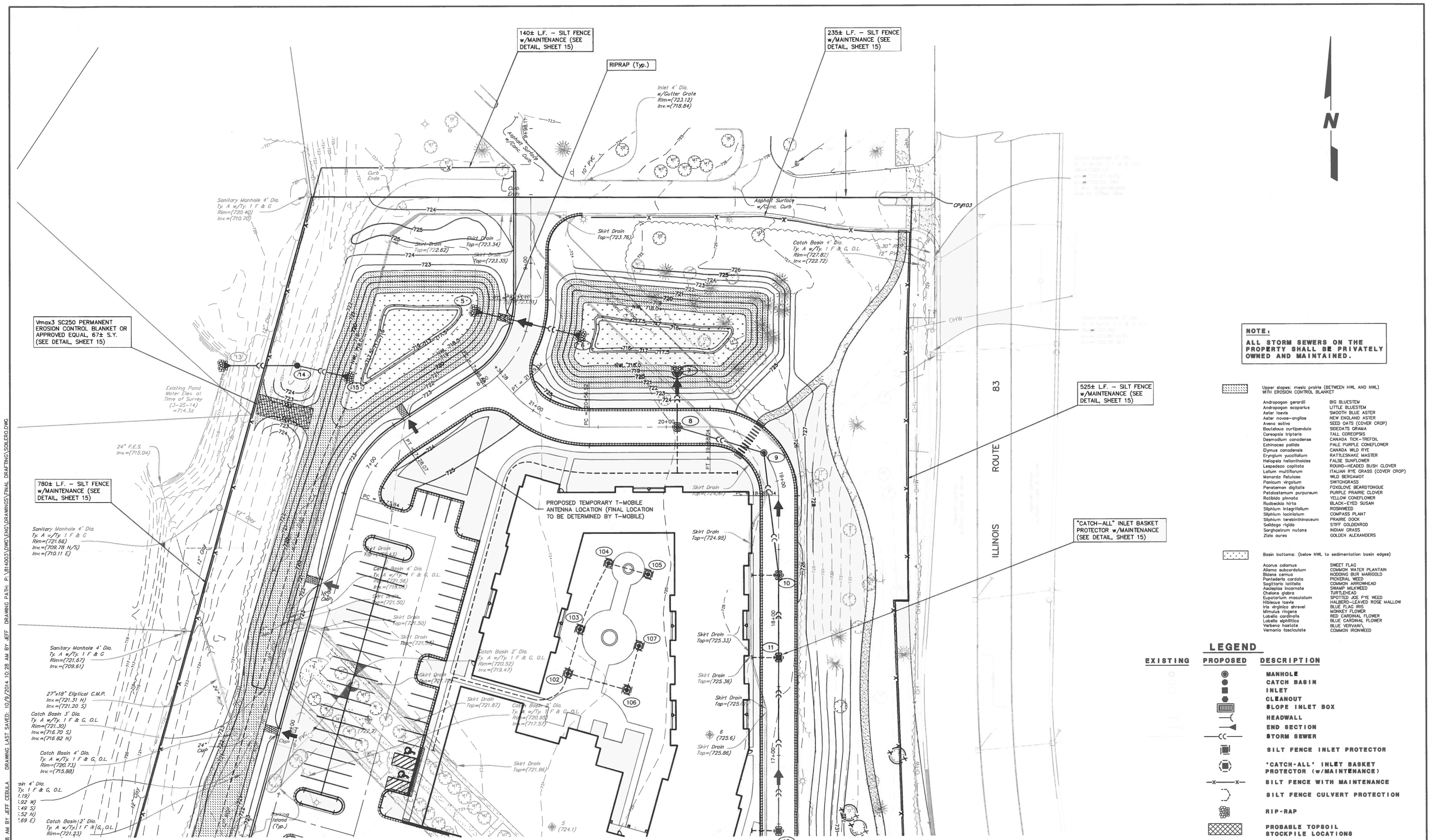

NOTE:

ALL STORM SEWERS ON THE PROPERTY SHALL BE PRIVATELY OWNED AND MAINTAINED.

Upper slopes: mesic prairie (BETWEEN HWL AND NWL) WITH EROSION CONTROL BLANKET

Andropogon gerardii	BIG BLUESTEM
Andropogon scoparius	LITTLE BLUESTEM
Aster laevis	SMOOTH BLUE ASTER
Aster novae-angliae	NEW ENGLAND ASTER
Avena sativa	SEED OATS (COVER CROP)
Bouteloua curtipendula	SIDEOATS GRAMA
Coreopsis tripteris	TALL COREOPSIS
Desmodium canadense	CANADA TICK-TREFOIL
Echinacea pallida	PALE PURPLE CONEFLOWER
Elymus canadensis	CANADA WILD RYE
Eryngium yuccifolium	RATTLESNAKE MASTER
Heliopsis helianthoides	FALSE SUNFLOWER
Lespedeza capitata	ROUND-HEADED BUSH CLOVER
Lolium multiflorum	ITALIAN RYE GRASS (COVER CROP)
Monarda fistulosa	WILD BERGAMOT
Panicum virgatum	SWITCHGRASS
Penstemon digitalis	FOXGLOVE BEARDTONGUE
Petalostemum purpureum	PURPLE PRAIRIE CLOVER
Ratibida pinnata	YELLOW CONEFLOWER
Rudbeckia hirta	BLACK-EYED SUSAN
Silphium integrifolium	ROSINWEED
Silphium laciniatum	COMPASS PLANT
Silphium terebinthinaceum	PRAIRIE DOCK
Solidago rigida	STIFF GOLDENROD
Sorghastrum nutans	INDIAN GRASS
Zizia aurea	GOLDEN ALEXANDERS

Basin bottoms: (below NWL to sedimentation basin edges)

Acorus calamus	SWEET FLAG
Alisma subcordatum	COMMON WATER PLANTAIN
Bidens cernua	NODDING BUR MARIGOLD
Pontederia cordata	PICKERAL WEED
Sagittaria latifolia	COMMON ARROWHEAD
Asclepias incarnate	SWAMP MILKWEED
Chelone glabra	TURTLEHEAD
Eupatorium maculatum	SPOTTED JOE PYE WEED
Hibiscus laevis	HALBERD-LEAVED ROSE MALLOW
Iris virginica shrevei	BLUE FLAG IRIS
Mimulus ringens	MONKEY FLOWER
Lobelia cardinalis	RED CARDINAL FLOWER
Lobelia siphilitica	BLUE CARDINAL FLOWER
Verbena hastate	BLUE VERVAIN\
Vernonia fasciculate	COMMON IRONWEED

LEGEND

EXISTING	PROPOSED	DESCRIPTION
		MANHOLE
		CATCH BASIN
		INLET
		CLEANOUT
		SLOPE INLET BOX
		HEADWALL
		END SECTION
		STORM SEWER
		SILT FENCE INLET PROTECTOR
		'CATCH-ALL' INLET BASKET PROTECTOR (w/MAINTENANCE)
		SILT FENCE WITH MAINTENANCE
		SILT FENCE CULVERT PROTECTION
		RIP-RAP
		PROBABLE TOPSOIL STOCKPILE LOCATIONS
	NO.	NUMBERING SYSTEM USED ON PLANS FOR DRAINAGE STRUCTURE IDENTIFICATION

Copyright © 2014 Cemcon, Ltd. All rights reserved.

PREPARED FOR:
HARBOR RETIREMENT ASSOCIATES
1440 HIGHWAY A1A
VERO BEACH, FLORIDA 32963

PREPARED BY:
CEMCON, Ltd.
Consulting Engineers, Land Surveyors & Planners
2280 White Oak Circle, Suite 100
Aurora, Illinois 60502-9675
Ph: 630.862.2100 Fax: 630.862.2199
E-Mail: cadd@cemcon.com Website: www.cemcon.com

REVISIONS

NO.	DATE	DESCRIPTION	NO.	DATE	DESCRIPTION

OVERALL SOIL EROSION AND SEDIMENTATION CONTROL PLAN

HARBORCHASE OF LONG GROVE

FILE NAME: SOILERO	DSGN. BY: KMM	JOB NO.: 814.003	FLD. BK./PG.: ---	SHEET NO. 13 of 20
DIR: 814003	DRN. BY: JGC	DATE: 10-10-14	SCALE: 1" = 30'	

PLOT FILE CREATED: 10/9/2014 10:58 AM BY JEFF CEBULA DRAWING LAST SAVED: 10/9/2014 10:28 AM BY JEFF DRAWING PATH: P:\814003\DWG\ENG\DRAWINGS\FINAL DRAFTING\SOILERO.DWG

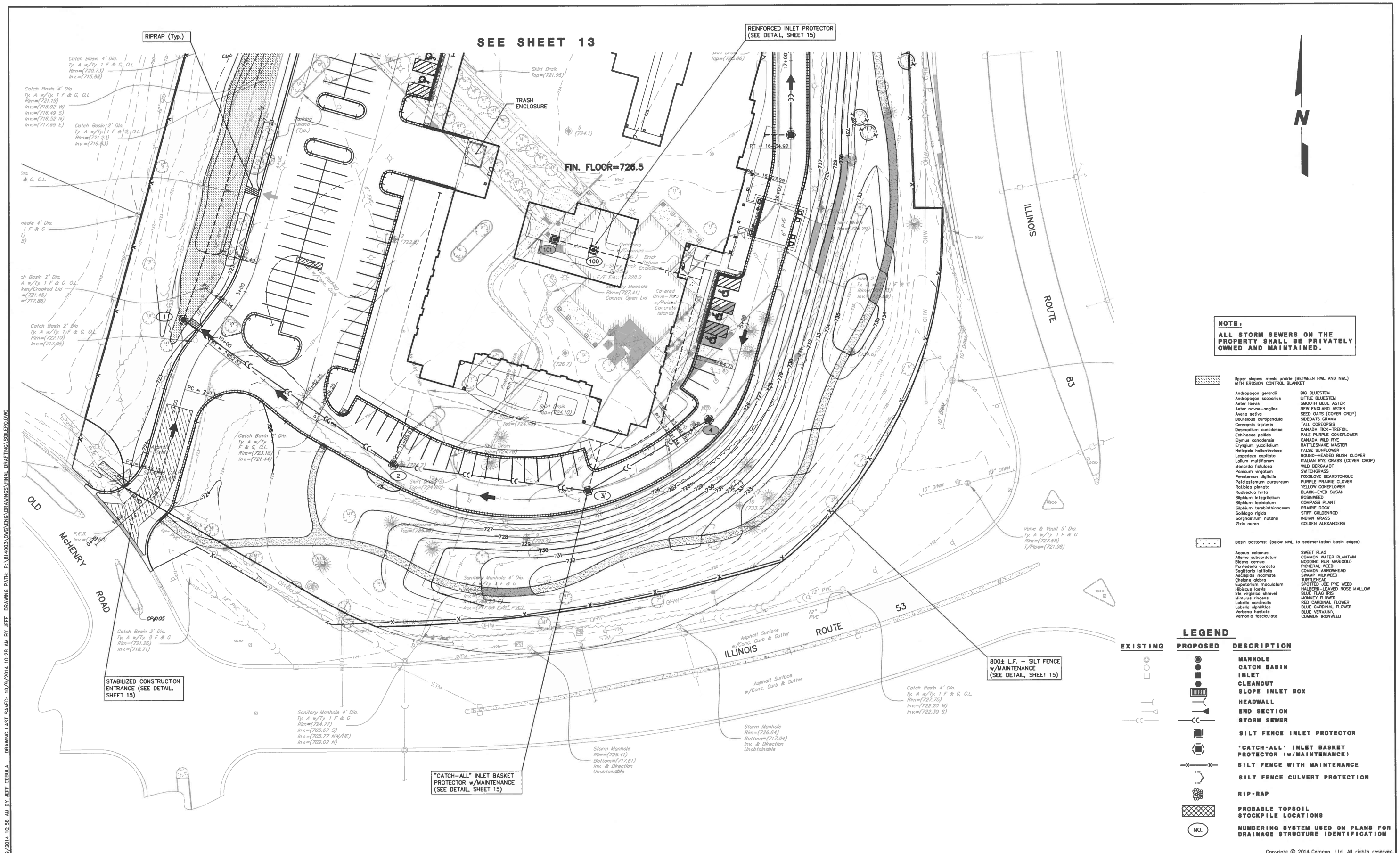

NOTE:

ALL STORM SEWERS ON THE PROPERTY SHALL BE PRIVATELY OWNED AND MAINTAINED.

Upper slopes: mesic prairie (BETWEEN HWL AND NWL) WITH EROSION CONTROL BLANKET

Andropogon gerardii	BIG BLUESTEM
Andropogon scoparius	LITTLE BLUESTEM
Aster laevis	SMOOTH BLUE ASTER
Aster novae-angliae	NEW ENGLAND ASTER
Avena sativa	SEED OATS (COVER CROP)
Bouteloua curtipendula	SIDEOATS GRAMA
Coreopsis tripteris	TALL COREOPSIS
Desmodium canadense	CANADA TICK-TREFOIL
Echinacea pallida	PALE PURPLE CONEFLOWER
Elymus canadensis	CANADA WILD RYE
Eryngium yuccifolium	RATTLESNAKE MASTER
Heliopsis helianthoides	FALSE SUNFLOWER
Lespedeza capitata	ROUND-HEADED BUSH CLOVER
Lolium multiflorum	ITALIAN RYE GRASS (COVER CROP)
Monarda fistulosa	WILD BERGAMOT
Panicum virgatum	SWITCHGRASS
Penstemon digitalis	FOXGLOVE BEARDTONGUE
Petalostemum purpureum	PURPLE PRAIRIE CLOVER
Ratibida pinnata	YELLOW CONEFLOWER
Rudbeckia hirta	BLACK-EYED SUSAN
Silphium integrifolium	ROSINWEED
Silphium laciniatum	COMPASS PLANT
Silphium terebinthinaceum	PRAIRIE DOCK
Solidago rigida	STIFF GOLDENROD
Sorghastrum nutans	INDIAN GRASS
Zizia aurea	GOLDEN ALEXANDERS

Basin bottoms: (below NWL to sedimentation basin edges)

Acorus calamus	SWEET FLAG
Alisma subcordatum	COMMON WATER PLANTAIN
Bidens cernua	NODDING BUR MARIGOLD
Pontederia cordata	PICKERAL WEED
Sagittaria latifolia	COMMON ARROWHEAD
Asclepias incarnata	SWAMP MILKWEED
Chelone glabra	TURTLEHEAD
Eupatorium maculatum	SPOTTED JOE PYE WEED
Hibiscus laevis	HALBERD-LEAVED ROSE MALLOW
Iris virginica shrevei	BLUE FLAG IRIS
Mimulus ringens	MONKEY FLOWER
Lobelia cardinalis	RED CARDINAL FLOWER
Lobelia siphilitica	BLUE CARDINAL FLOWER
Verbena hastata	BLUE VERVAIN
Vernonia fasciculata	COMMON IRONWEED

LEGEND

EXISTING	PROPOSED	DESCRIPTION
		MANHOLE
		CATCH BASIN
		INLET
		CLEANOUT
		SLOPE INLET BOX
		HEADWALL
		END SECTION
		STORM SEWER
		SILT FENCE INLET PROTECTOR
		"CATCH-ALL" INLET BASKET PROTECTOR (w/MAINTENANCE)
		SILT FENCE WITH MAINTENANCE
		SILT FENCE CULVERT PROTECTION
		RIP-RAP
		PROBABLE TOPSOIL STOCKPILE LOCATIONS
	NO.	NUMBERING SYSTEM USED ON PLANS FOR DRAINAGE STRUCTURE IDENTIFICATION

Copyright © 2014 Cemcon, Ltd. All rights reserved.

PREPARED FOR:
HARBOR RETIREMENT ASSOCIATES
1440 HIGHWAY A1A
VERO BEACH, FLORIDA 32963

PREPARED BY:
CEMCON, Ltd.
Consulting Engineers, Land Surveyors & Planners
2280 White Oak Circle, Suite 100
Aurora, Illinois 60502-9675
Ph: 630.862.2100 Fax: 630.862.2199
E-Mail: cadd@cemcon.com Website: www.cemcon.com

REVISIONS

NO.	DATE	DESCRIPTION	NO.	DATE	DESCRIPTION

OVERALL SOIL EROSION AND SEDIMENTATION CONTROL PLAN

HARBORCHASE OF LONG GROVE

FILE NAME: SOILERO	DSGN. BY: KMM	JOB NO.: 814.003	FLD. BK./PG.: ----	SHEET NO. 14 of 20
DIR: 814003	DRN. BY: JGC	DATE: 10-10-14	SCALE: 1" = 30'	

PLOT FILE CREATED: 10/9/2014 10:58 AM BY JEFF CEBULA DRAWING LAST SAVED: 10/9/2014 10:29 AM BY JEFF DRAWING PATH: P:\814003\DWG\ENG\DRAWINGS\FINAL DRAFTING\SOILERO.DWG

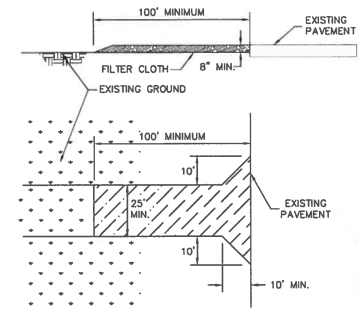

STABILIZED CONSTRUCTION ENTRANCE

(TEMPORARY)

CONSTRUCTION ENTRANCE SPECIFICATIONS

1. STONE SIZE – USE 2" STONE, OR RECLAIMED OR RECYCLED CONCRETE EQUIVALENT.
2. THICKNESS – NOT LESS THAN (8) INCHES.
3. FILTER CLOTH – SHALL BE PLACED OVER THE ENTIRE AREA PRIOR TO PLACING OF STONE.
4. MAINTENANCE – THE ENTRANCE SHALL BE MAINTAINED IN A CONDITION WHICH WILL PREVENT TRACKING OR FLOWING OF SEDIMENT ONTO PUBLIC RIGHTS–OF–WAY. THIS MAY REQUIRE PERIODIC TOP DRESSING WITH ADDITIONAL STONE AS CONDITIONS DEMAND AND REPAIR AND/OR CLEANOUT OF ANY MEASURES USED TO TRAP SEDIMENT. ALL SEDIMENT SPILLED, DROPPED, WASHED OR TRACKED ONTO PUBLIC RIGHTS–OF–WAY MUST BE REMOVED IMMEDIATELY.
5. WASHING – WHEELS SHALL BE CLEANED TO REMOVE SEDIMENT PRIOR TO ENTRANCE ONTO PUBLIC RIGHT–OF–WAY. WHEN WASHING IS REQUIRED, IT SHALL BE DONE ON AN AREA STABILIZED WITH STONE AND WHICH DRAINS INTO AN APPROVED SEDIMENT TRAPPING DEVICE.
6. PERIODIC INSPECTION AND NEEDED MAINTENANCE SHALL BE PROVIDED AFTER EACH RAIN.

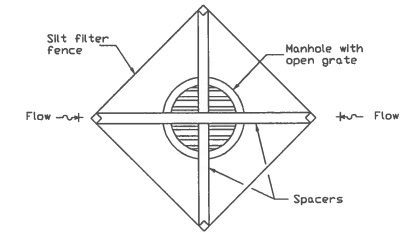

REINFORCED INLET PROTECTORS

36" POLYPROPYLENE, CONTINUOUS FILAMENT, NEEDLE PUNCHED NONWOVEN GEOTEXTILE WITH BIAXIAL GEOGRID REINFORCEMENT

POLYMER	POLYPROPYLENE
WEIGHT	4.5 oz/sys
U.V. RESISTANCE	>85%
PERMITTIVITY	3.0 SEC–1
WATER FLOW RATE	225 GPM/SQ. FT.
TRAPEZOIDAL TEAR	50 LBS.
GRAB TENSILE/ELONGATION	125 LBS/50
STRUCTURE	NONWOVEN

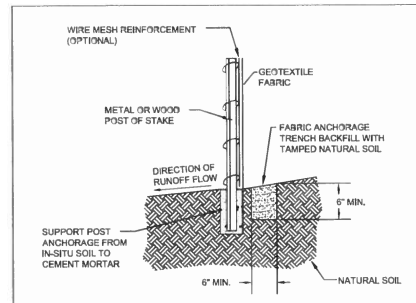

NOTE:

DEPENDING UPON THE CONFIGURATION, ATTACH FABRIC TO WIRE MESH WITH HOG RINGS, STEEL POST WITH TIE WIRES, WOOD POST WITH NAILS.

TEMPORARY EROSION CONTROL MEASURE - SILT FENCE		LANDSCAPE 3
EFFECTIVE: 2/29/2008	SHEET 1 OF 1	790.03

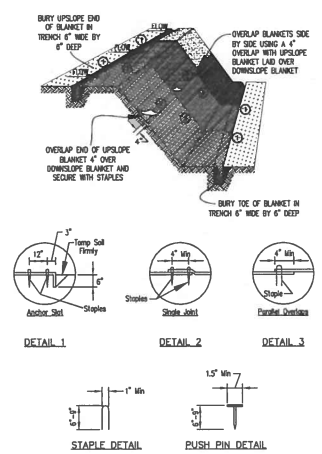

NOTES:

1. Staples shall be placed in a diamond pattern at 2 per s.y. for stitched blankets. Non–stitched shall use 4 staples per s.y. of material. This equates to 200 staples with stitched blanket and 400 staples with non–stitched blanket per 100 s.y. of material.
2. Staple or push pin lengths shall be selected based on soil type and conditions. (minimum staple length is 6")
3. Erosion control material shall be placed in contact with the soil over a prepared seedbed.
4. All anchor slots shall be stapled at approximately 12" intervals.

EROSION CONTROL BLANKET INSTALLATION DETAILS

Vmax3 SC250 (INSTALL PER MANUFACTURER INSTRUCTIONS)

Permanent Turf Reinforcement Mat

Vmax3 SC250 is constructed of a permanent, high–strength, three–dimensional matting structure that incorporates a straw/coconut fiber matrix. The straw/coconut fiber matrix enhances the permanent matting component's initial mulching and erosion control performance for up to 24 months.

SC250 provides extended–term, pre–vegetated erosion protection and permanent turf reinforcement in a wide range of applications, including severe slopes, medium– to high–flow channels, and stream banks. It is proven in extensive laboratory and field research to increase the shear resistance of vegetation up to 10 lbs/ft2 (480 Pa).

With the toughest unreinforced grasses typically failing at shear stress levels of 3.7 lbs/ft2, the high–performance SC250 more than doubles the shear resistance of vegetation. This enables SC250 to be used in applications where rock riprap and concrete were once specified

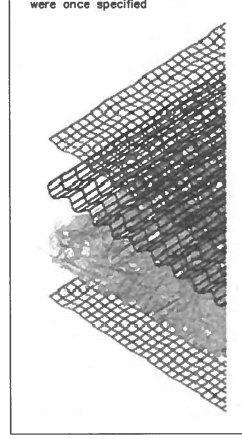

Top Net
Polypropylene
5.0 lbs/1,000 ft2
(2.44 kg/100 m2) approx. wt.

Center Net
Polypropylene, corrugated
24.0 lbs/1,000 ft2
(11.7 kg/100 m2) approx. wt.

Matrix Material
70% agricultural straw
0.35 lbs/yd2
(0.19 kg/m2)
30% coconut fiber
0.15 lbs/yd2
(0.08 kg/m2)

Bottom Net
Polypropylene
5.0 lbs/1,000 ft2
(2.44 kg/100 m2) approx. wt.

Thread
Permanent

Suggested Maintenance Catch-All Inlet Protector

The frequency and degree of maintenance required is dependent on site conditions and rainfall. Certain types of soil and run-off laden with hydrocarbons, (oil, solvents, etc.), tend to "*silt-up*" the fabric bags more quickly than others

Generally, the bags can be emptied, inverted, washed, and re-used throughout an entire project. They may also be vacuumed. The bag must be replaced if it is severely worn or torn.

GUIDELINES FOR CONSTRUCTION SITES

1. Inspect the bag at least every 2 weeks Clean, if needed
2. Inspect the bag every time there is rainfall totaling 1 or more inches – Clean, if needed
3. Replace the bag if it has a hole in it
4. Replace the bag if it appears clean but won't pass water

Suggested Maintenance
Catch All HR

Typically, the Catch All HR is installed in a paved parking lot or maintenance yard. The degree and frequency of maintenance required is generally far less than for Catch-Alls installed at construction sites.

GUIDELINES FOR PARKING LOTS & MAINTENANCE YARDS

1. Inspect the bag at least once per month Clean, if needed
2. Inspect the bag every time there is rainfall totaling more than two inches – Clean, if needed
3. Replace the bag every 6 months; More often for harsh environments
4. Replace the bag after any oil, coolant, or solvent spill
5. Replace the bag if it has a hole in it
6. Replace the bag if it appears clean but won't pass water

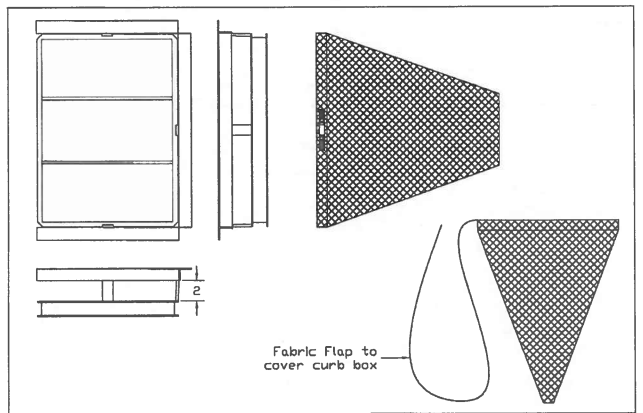

GENERAL NOTES:
FRAME: Top Flange Fabricated from 1½"x1½"x¼" angle. Base rim Fabricated from 1½"x½"x¼" channel. Handles and suspension brackets Fabricated from 1½"x¼" flat stock. All steel conforming to ASTM-A36.
SEDIMENT BAG: Bag Fabricated from 4 oz/sqyd. non-woven polypropylene geotextile reinforced with polyester mesh. Bag secured to base rim with a stainless steel band and lock.

DATE	REVISIONS
01-11-02	Original
03-07-04	Remove Back Rail

Typical Curb Box Catch-All

Marathon Materials, Inc.

Copyright © 2014 Cemcon, Ltd. All rights reserved.

PREPARED FOR:
HARBOR RETIREMENT ASSOCIATES
1440 HIGHWAY A1A
VERO BEACH, FLORIDA 32963

PREPARED BY:
CEMCON, Ltd.
Consulting Engineers, Land Surveyors & Planners
2280 White Oak Circle, Suite 100
Aurora, Illinois 60502–9675
Ph: 630.862.2100 Fax: 630.862.2199
E–Mail: cadd@cemcon.com Website: www.cemcon.com

REVISIONS

NO.	DATE	DESCRIPTION	NO.	DATE	DESCRIPTION

SOIL EROSION AND SEDIMENTATION CONTROL DETAILS

HARBORCHASE OF LONG GROVE

FILE NAME: SOILERO	DSGN. BY: KMM	JOB NO.: 814.003	FLD. BK./PG.: ---	SHEET NO. 15 of 20
DIR: 814003	DRN. BY: JGC	DATE: 10–10–14	SCALE: 1" = ---	

PLOT FILE CREATED: 10/9/2014 10:58 AM BY JEFF CEBULA DRAWING LAST SAVED: 10/9/2014 10:28 AM BY JEFF DRAWING PATH: P:\814003\DWG\ENG\DRAWINGS\FINAL DRAFTING\SOILERO.DWG

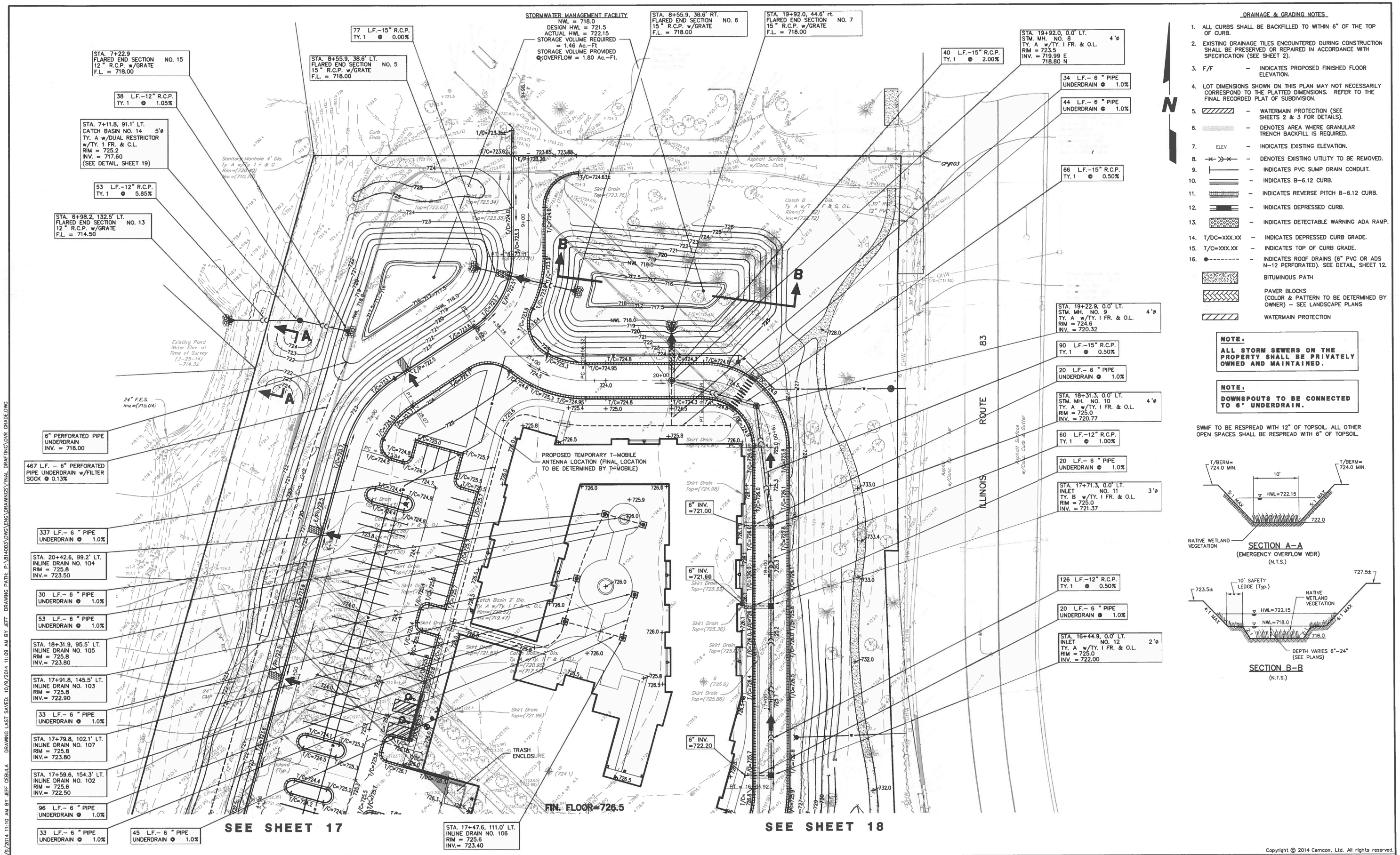

DRAINAGE & GRADING NOTES

1. ALL CURBS SHALL BE BACKFILLED TO WITHIN 6" OF THE TOP OF CURB.
2. EXISTING DRAINAGE TILES ENCOUNTERED DURING CONSTRUCTION SHALL BE PRESERVED OR REPAIRED IN ACCORDANCE WITH SPECIFICATION (SEE SHEET 2).
3. F/F – INDICATES PROPOSED FINISHED FLOOR ELEVATION.
4. LOT DIMENSIONS SHOWN ON THIS PLAN MAY NOT NECESSARILY CORRESPOND TO THE PLATTED DIMENSIONS. REFER TO THE FINAL RECORDED PLAT OF SUBDIVISION.
5. – WATERMAIN PROTECTION (SEE SHEETS 2 & 3 FOR DETAILS).
6. – DENOTES AREA WHERE GRANULAR TRENCH BACKFILL IS REQUIRED.
7. ELEV – INDICATES EXISTING ELEVATION.
8. – DENOTES EXISTING UTILITY TO BE REMOVED.
9. – INDICATES PVC SUMP DRAIN CONDUIT.
10. – INDICATES B-6.12 CURB.
11. – INDICATES REVERSE PITCH B-6.12 CURB.
12. – INDICATES DEPRESSED CURB.
13. – INDICATES DETECTABLE WARNING ADA RAMP.
14. T/DC=XXX.XX – INDICATES DEPRESSED CURB GRADE.
15. T/C=XXX.XX – INDICATES TOP OF CURB GRADE.
16. – INDICATES ROOF DRAINS (6" PVC OR ADS N-12 PERFORATED). SEE DETAIL, SHEET 12.

BITUMINOUS PATH

PAVER BLOCKS (COLOR & PATTERN TO BE DETERMINED BY OWNER) – SEE LANDSCAPE PLANS

WATERMAIN PROTECTION

NOTE:
ALL STORM SEWERS ON THE PROPERTY SHALL BE PRIVATELY OWNED AND MAINTAINED.

NOTE:
DOWNSPOUTS TO BE CONNECTED TO 6" UNDERDRAIN.

SWMF TO BE RESPREAD WITH 12" OF TOPSOIL. ALL OTHER OPEN SPACES SHALL BE RESPREAD WITH 6" OF TOPSOIL.

SECTION A-A
(EMERGENCY OVERFLOW WEIR)
(N.T.S.)

SECTION B-B
(N.T.S.)

Copyright © 2014 Cemcon, Ltd. All rights reserved.

PREPARED FOR:
HARBOR RETIREMENT ASSOCIATES
1440 HIGHWAY A1A
VERO BEACH, FLORIDA 32963

PREPARED BY:
CEMCON, Ltd.
Consulting Engineers, Land Surveyors & Planners
2280 White Oak Circle, Suite 100
Aurora, Illinois 60502-9675
Ph: 630.862.2100 Fax: 630.862.2199
E-Mail: cadd@cemcon.com Website: www.cemcon.com

REVISIONS

NO.	DATE	DESCRIPTION	NO.	DATE	DESCRIPTION

DRAINAGE AND GRADING PLAN
HARBORCHASE OF LONG GROVE

FILE NAME: OVR GRADE	DSGN. BY: KMM	JOB NO.: 814.003	FLD. BK./PG.: ---	SHEET NO. 16 of 20
DIR: 814003	DRN. BY: JGC	DATE: 10-10-14	SCALE: 1" = 30'	

PLOT FILE CREATED: 10/9/2014 11:10 AM BY JEFF CEBULA DRAWING LAST SAVED: 10/9/2014 11:09 AM BY JEFF DRAWING PATH: P:\814003\DWG\ENG\DRAWINGS\FINAL DRAFTING\OVR GRADE.DWG

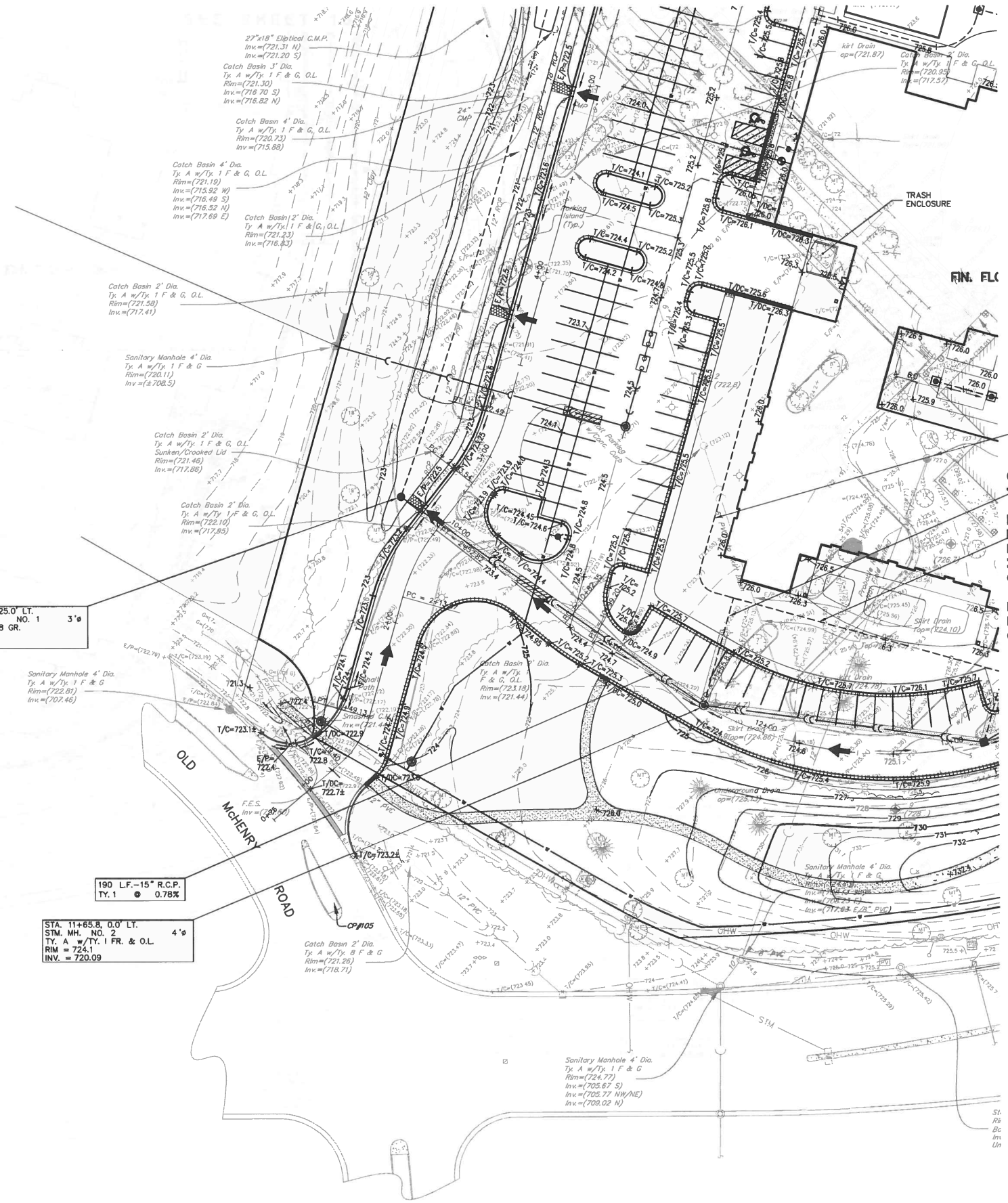

DRAINAGE & GRADING NOTES

1. ALL CURBS SHALL BE BACKFILLED TO WITHIN 6" OF THE TOP OF CURB.
2. EXISTING DRAINAGE TILES ENCOUNTERED DURING CONSTRUCTION SHALL BE PRESERVED OR REPAIRED IN ACCORDANCE WITH SPECIFICATION (SEE SHEET 2).
3. F/F – INDICATES PROPOSED FINISHED FLOOR ELEVATION.
4. LOT DIMENSIONS SHOWN ON THIS PLAN MAY NOT NECESSARILY CORRESPOND TO THE PLATTED DIMENSIONS. REFER TO THE FINAL RECORDED PLAT OF SUBDIVISION.
5. – WATERMAIN PROTECTION (SEE SHEETS 2 & 3 FOR DETAILS).
6. – DENOTES AREA WHERE GRANULAR TRENCH BACKFILL IS REQUIRED.
7. ELEV – INDICATES EXISTING ELEVATION.
8. – DENOTES EXISTING UTILITY TO BE REMOVED.
9. – INDICATES PVC SUMP DRAIN CONDUIT.
10. – INDICATES B-6.12 CURB.
11. – INDICATES REVERSE PITCH B-6.12 CURB.
12. – INDICATES DEPRESSED CURB.
13. – INDICATES DETECTABLE WARNING ADA RAMP.
14. T/DC=XXX.XX – INDICATES DEPRESSED CURB GRADE.
15. T/C=XXX.XX – INDICATES TOP OF CURB GRADE.
16. – INDICATES ROOF DRAINS (6" PVC OR ADS N-12 PERFORATED). SEE DETAIL, SHEET 12.

BITUMINOUS PATH

PAVER BLOCKS (COLOR & PATTERN TO BE DETERMINED BY OWNER) – SEE LANDSCAPE PLANS

WATERMAIN PROTECTION

NOTE:
ALL STORM SEWERS ON THE PROPERTY SHALL BE PRIVATELY OWNED AND MAINTAINED.

NOTE:
DOWNSPOUTS TO BE CONNECTED TO 6" UNDERDRAIN.

SWMF TO BE RESPREAD WITH 12" OF TOPSOIL. ALL OTHER OPEN SPACES SHALL BE RESPREAD WITH 6" OF TOPSOIL.

Copyright © 2014 Cemcon, Ltd. All rights reserved.

PREPARED FOR:
HARBOR RETIREMENT ASSOCIATES
1440 HIGHWAY A1A
VERO BEACH, FLORIDA 32963

PREPARED BY:
CEMCON, Ltd.
Consulting Engineers, Land Surveyors & Planners
2280 White Oak Circle, Suite 100
Aurora, Illinois 60502-9675
Ph: 630.862.2100 Fax: 630.862.2199
E-Mail: cadd@cemcon.com Website: www.cemcon.com

REVISIONS

NO.	DATE	DESCRIPTION	NO.	DATE	DESCRIPTION

DRAINAGE AND GRADING PLAN
HARBORCHASE OF LONG GROVE

FILE NAME: OVR GRADE	DSGN. BY: KMM	JOB NO.: 814.003	FLD. BK./PG.: ---	SHEET NO.
DIR: 814003	DRN. BY: JGC	DATE: 10-10-14	SCALE: 1" = 30'	17 of 20

PLOT FILE CREATED: 10/9/2014 11:10 AM BY JEFF CEBULA DRAWING LAST SAVED: 10/9/2014 11:09 AM BY JEFF DRAWING PATH: P:\814003\DWG\ENG\DRAWINGS\FINAL DRAFTING\OVR GRADE.DWG

PLOT FILE CREATED: 10/9/2014 10:58 AM BY JEFF CEBULA DRAWING LAST SAVED: 10/8/2014 2:09 PM BY JEFF DRAWING PATH: P:\814003\DWG\ENG\DRAWINGS\FINAL DRAFTING\DETAILS.DWG

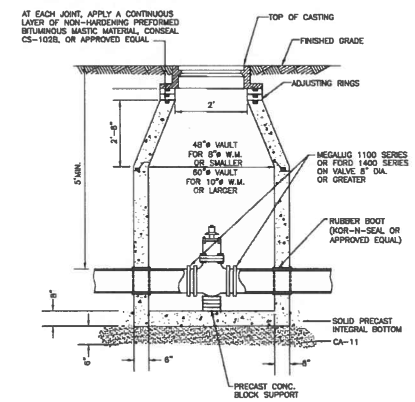

1. VALVE MUST ALIGN WITH THE CENTER OF VAULT OPENINGS.
2. CONCENTRIC CONES TO BE USED FOR VALVES 12" AND SMALLER.
3. VALVES SHALL BE RESILIENT WEDGE GATE VALVES WITH MECHANICAL JOINT ENDS TO COMPLY WITH ANSI/AWWA C515-09 OR LATEST VERSION VALVES TO BE CLOW, AMERICAN, WATEROUS, KENNEDY OR APPROVED EQUAL.
4. WHEN ADJUSTMENTS ARE NECESSARY, THEY SHALL BE PERFORMED WITH A MAXIMUM OF TWO (2) PRECAST CONCRETE RINGS SET IN A BED OF PREFORMED NON-HARDENING MASTIC MATERIAL (CONSEAL CS-102B, OR APPROVED EQUAL) TO A MAXIMUM HEIGHT OF 12".

VALVE VAULT

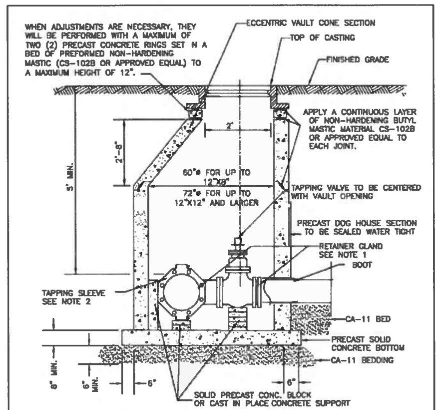

1.) USE MEGALUG SERIES 1100 OR FORD UNI-FLANGE SERIES 1400 RETAINER GLANDS WITH STAINLESS STEEL T-BOLTS COATED WITH ANTI-SEIZE COMPOUND
2) TAPPING SLEEVES SHALL BE CAST OR DUCTILE IRON MECHANICAL JOINT CONFORMING TO ANSI/AWWA C110/A21.10-82 (TYLER/UNION OR APPROVED EQUAL). EXISTING PIPE TO BE DISINFECTED PRIOR TO INSTALLATION OF TAPPING SLEEVE. TAPPING SLEEVE TO BE PRESSURE TESTED HYDROSTATICALLY TO OPERATING PRESSURE PLUS 50 PERCENT PRIOR TO MAKING PRESSURE CONNECTION.
3) EXISTING PIPE TO BE DISINFECTED PRIOR TO INSTALLATION OF TAPPING SLEEVE AND TAPPING SLEEVE IS TO BE PRESSURE TESTED TO OPERATING PRESSURE PLUS 50 PERCENT PRIOR TO MAKING PRESSURE CONNECTION.
4) DO NOT USE STAINLESS STEEL SLEEVE ON SIZE TAPS OR PIPES LARGER THAN 12" DIAMETER
5) IN THE EVENT IT IS NECESSARY TO USE A PRECAST SPLIT BOTTOM FLOOR DUE TO SPACE CONSTRAINTS THE FLOOR MUST BE GROUTED WATER TIGHT.
6) TAPPING VALVES SHALL CONFORM TO C515-09 OR LATEST REVISION: AMERICAN SERIES 2500 RESILIENT WEDGE TAPPING VALVES WITH FLANGED X MECHANICAL JOINT ENDS OR APPROVED EQUAL.

VALVE VAULT WITH CAST/DUCTILE IRON SLEEVE PRESSURE TAP

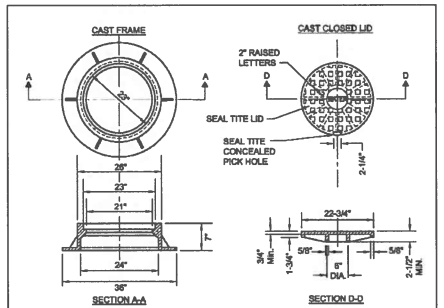

NOTES:

1. DUCTILE IRON SHALL BE GRADE 65-45-12 AND SHALL BE TESTED IN ACCORDANCE WITH FEDERAL SPECIFICATIONS.
2. ALL FRAMES AND COVERS SHALL HAVE MACHINED HORIZONTAL AND VERTICAL BEARING SURFACES. PICK HOLES SHALL NOT CREATE OPENINGS IN THE COVER.
3. THE MANHOLE COVERS SHALL HAVE RAISED LETTERS AS SHOWN.
4. ALTERNATIVE TO DUCTILE IRON LID, GREY IRON CL 35 LID MAY BE USED.
5. DIMENSIONS FOR CASTINGS ARE COMPARABLE TO EAST JORDAN 1022 OR NEENAH R-1772-C, HEAVY DUTY.
6. LIDS AND FRAMES TO MEET AASHTO M306 PROOF LOADING SPECIFICATIONS.

VALVE VAULT – FRAME & COVER

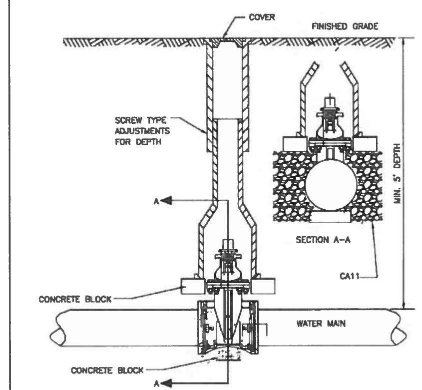

NOTES:

1. TYLER 6850 OR APPROVED EQUAL. FOR LARGER VALVES TYLER 6860 OR APPROVED EQUAL WITH #6 BASE.
2. VALVE BOXES ARE NOT ALLOWED IN PAVED AREAS – VALVE VAULT SHALL BE PROVIDED. CONTRACTOR SHALL SUBMIT IN WRITING ANY LOCATION WHERE A VAULT IS NOT INTENDED TO BE INSTALLED AND SPECIFIC REASON WHY IT CANNOT BE INSTALLED. THIS MUST BE APPROVED IN WRITING BY DPU-WATER.
3. RESTRAINT GLANDS REQUIRED ON EACH SIDE OF VALVE IF STUBBED FOR FUTURE CONNECTION OR PIPE BEND WITHIN TWO PIPE LENGTHS OF VALVE.

VALVE BOX

NOTES:
1. CHAIN AND CHAIN HOOKS SHALL BE REMOVED FROM HYDRANT
2. HYDRANT SHALL BE FACTORY PAINTED WITH 2 COATS OF TNEMEC VERSATONE 82 HS (OR APPROVED EQUAL) SAFETY ORANGE
3. ALL FASTENERS/HARDWARE BELOW GRADE SHALL BE STAINLESS STEEL. (GRADE 304 MIN.)

PERMITTED TYPES:
–WATEROUS PACER WB-67 5-1/4"
–CLOW MEDALLION 5-1/4"
–MUELLER A-421 5-1/4"

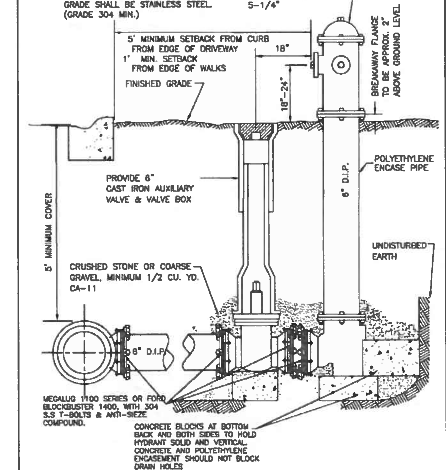

HYDRANT

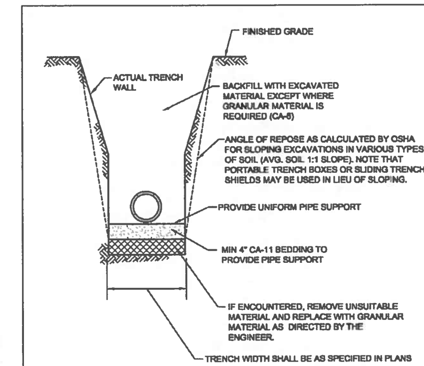

NOTES:

1. IN PAVED AREAS ALL TRENCHES SHALL BE COMPACTED IN ACCORDANCE WITH SECTION 550.07 OF THE IDOT STANDARD SPECIFICATIONS FOR ROAD AND BRIDGE CONSTRUCTION. METHOD 1. 95% MINIMUM STANDARD PROCTOR.
2. DUCTILE IRON WATER MAIN TO BE CLASS 52. ALL DUCTILE IRON PIPE IS TO BE ENCASED IN POLYETHYLENE FILM. POLYETHYLENE ENCASEMENT TO BE INSTALLED IN ACCORDANCE WITH AWWAC105A21.5-99 (OR LATEST EDITION)
3. STAINLESS STEEL NUTS, BOLTS/T-BOLTS, AND WASHERS, TYPE 304 OR BETTER, WILL BE REQUIRED ON ALL WATER MAIN INSTALLATIONS. THIS WOULD APPLY TO HYDRANTS, TAPPING SLEEVES, VALVES, FITTINGS, RESTRAINT, AND OTHER APPURTENANCES BURIED OR IN VALVE VAULTS. MECHANICAL JOINTS AND RESTRAINT GLANDS REQUIRE 304 STAINLESS STEEL T-BOLTS. AN ANTI-SEIZE COMPOUND SHALL BE FACTORY APPLIED TO NUTS OR BOLTS - ANY DAMAGE TO THIS COATING SHALL BE REPAIRED WITH FIELD-APPLIED, APPROVED ANTI-SEIZE COMPOUND THAT IS A MOLYBDENUM-BASE LUBRICANT, BOSTIK NEVER-SEEZ OR APPROVED EQUAL.

WATER MAIN TRENCH SECTION

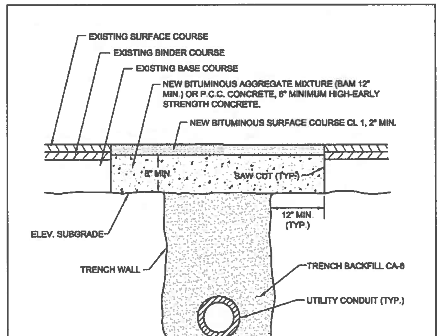

NOTES:

1. THE TRENCH SHALL BE BACKFILLED WITH AGGREGATE (CA-6) AND COMPACTED TO 95% OF THE STANDARD PROCTOR DENSITY. TRENCH SPOILS OR EXCAVATED MATERIAL SHALL BE DISCARDED BY THE CONTRACTOR, AT HIS EXPENSE, AT DUMP SITES OR IN A SUITABLE FASHION AS APPROVED BY THE ENGINEER.
2. PRIOR TO PLACING OF P.C.C. CONCRETE, THE EXPOSED EDGES OF ALL EXISTING PAVEMENT SHALL BE SAW CUT TO PROVIDE A SMOOTH, CLEAN EDGE, FREE OF LOOSE MATERIAL.
3. EXCAVATIONS SHALL BE PROTECTED BY BARRICADES WITH FLASHING LIGHTS. A 1" STEEL PLATE SHALL BE PROVIDED AND MAINTAINED BY THE CONTRACTOR AT LOCATIONS WHERE ADJUSTMENTS ARE LOCATED IN TRAVEL LANES UNTIL THE SURFACE RESTORATION IS COMPLETE. THE PLATE SHALL BE PROTECTED FROM SLIDING AND PROVIDED WITH BITUMINOUS RAMPS.
4. TRENCH TO BE COMPACTED IN CONFORMANCE WITH ARTICLE 603.08(METHOD 3) OF THE IDOT STANDARD SPECIFICATIONS FOR ROAD AND BRIDGE CONSTRUCTION.

UTILITY TRENCH PAVING SECTION (FLEXIBLE PAVEMENTS)

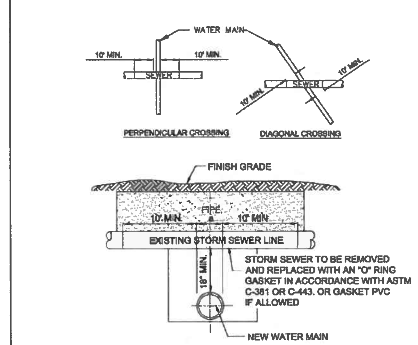

NOTE:
NEW STORM SEWER INSTALLATION SHALL BE GASKETED STRUCTURE TO STRUCTURE

WATER MAIN PROTECTION FROM EXISTING STORM SEWER PIPE

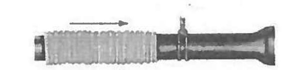

CUT A SECTION OF POLYETHYLENE TUBE APPROXIMATELY TWO FEET LONGER THAN THE PIPE SECTION. REMOVE ALL LUMPS OF CLAY, MUD, CINDERS, OR OTHER MATERIAL THAT MIGHT HAVE ACCUMULATED ON THE PIPE SURFACE DURING STORAGE. SLIP THE POLYETHYLENE TUBE AROUND THE PIPE, STARTING AT THE SPIGOT END. BUNCH THE TUBE ACCORDION-FASHION ON THE END OF THE PIPE. PULL BACK THE OVERHANGING END OF THE TUBE UNTIL IT CLEARS THE PIPE END.

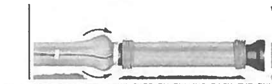

MAKE THE OVERLAP OF THE POLYETHYLENE TUBE BY PULLING BACK THE BUNCHED POLYETHYLENE FROM THE PRECEDING LENGTH OF PIPE AND SECURING IT IN PLACE. NOTE: THE POLYETHYLENE MAY BE SECURED IN PLACE BY USING TAPE, STRING, PLASTIC TIE STRAPS, OR ANY OTHER MATERIAL CAPABLE OF HOLDING THE POLYETHYLENE ENCASEMENT SNUGLY AGAINST THE PIPE.

TAKE UP SLACK IN THE TUBE ALONG THE BARREL OF THE PIPE TO MAKE A SNUG, BUT NOT TIGHT, FIT. FOLD EXCESS POLYETHYLENE BACK OVER THE TOP OF THE PIPE.

REPAIR ALL SMALL RIPS, TEARS OR OTHER TUBE DAMAGE WITH MANUFACTURER APPROVED ADHESIVE TAPE.

1. COVER BENDS, REDUCERS AND OTHER PIPE-SHAPED APPURTENANCES WITH POLYETHYLENE IN THE SAME MANNER AS THE PIPE.
2. WRAP VALVES, TEES AND OTHER ODD-SHAPED APPURTENANCES WITH A FLAT SHEET OR SPLIT LENGTH OF POLYETHYLENE TUBE BY PASSING THE SHEET UNDER THE APPURTENANCES AND BRINGING IT UP AROUND THE BODY. MAKE SEAMS BY BRINGING THE EDGES OF THE POLYETHYLENE SHEET TOGETHER, FOLDING OVER TWICE, AND TAPING DOWN.
3. POLYETHYLENE ENCASEMENT TO BE IN ACCORDANCE WITH A.W.W.A. C105-99OR LATEST VERSION.
4. COPPER SERVICE TAPS ARE TO BE WRAPPED WITH POLYETHELENE OR A SUITABLE DIELECTRIC APE FOR A MINIMUM CLEAR DISTANCE OF 3' AWAY FROM THE MAIN.

POLYETHYLENE ENCASEMENT

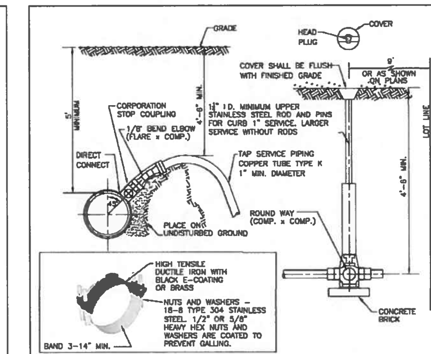

WATER MAIN SIZE	TAP SIZE	CONNECTION TYPE
6"Ø OR SMALLER	1"Ø OR SMALLER	DIRECT CONNECTION
	1 1/4"Ø OR LARGER	SADDLE CONNECTION
8"Ø OR LARGER	1 1/4"Ø OR SMALLER	DIRECT CONNECTION
	1 1/2"Ø OR LARGER	SADDLE CONNECTION

NOTES:
1. CORPORATION IS TO BE FLARING TYPE (FORD F-600 OR EQUAL BY MUELLER OR A.Y. MCDONALD). FOR SERVICE SIZE 1 ½": A.Y. MCDONALD 4701Q CORP STOP THREADED INLET TO COMPRESSION OUTLET OR EQUAL.
2. 1/8 BEND ELBOW – FEMALE FLARE TO COMPRESSION: FORD LA04. OR AN APPROVED EQUAL BY MUELLER, OR A.Y MCDONALD (NOT AVAILABLE IN IN 1½" SIZED SEE NOTE 1.).
3. CURB BOX IS ARCH PATTERN WITH 1 1/4" UPPER SECTION, WITH 1-1/4" BRASS PENTAGON PLUG.
4. CURB STOP IS WITH COMPRESSION COUPLING – FORD B44 CURB STOP, OR EQUAL BY MUELLER, OR A.Y. MCDONALD.
5. B-BOX HAS 1½" THREADED BRASS PENTAGON PLUG WITH THE WORD "WATER" IN RAISED LETTERS ON CAP. (1-1/4" PENT. PLUG FOR 1-1/4" ID. B-BOXES).
6. CORPORATION STOPS SHALL BE INSTALLED A MINIMUM OF 18" FROM PIPE JOINTS AND ENDS. MULTIPLE INSTALLATIONS SHOULD BE STAGGERED AROUND THE MAIN BY 22-1/2" AND SEPARATED FROM EACH OTHER BY 18".
7. WATER SERVICE LINE SMALLER THAN 3" SHALL BE TYPE K COPPER. IF JOINTS ARE REQUIRED DUE TO LENGTH OF SERVICE, THEN ONLY COMPRESSION TYPE COUPLING SHALL BE PERMITTED. NO SOLDERED OR FLARED TYPE JOINTS ARE ALLOWED.
8. SERVICE TAPS SHALL REQUIRE SADDLES IN ACCORDANCE WITH CHART BELOW. SADDLES SHALL BE STAINLESS STEEL DUAL BANDED, DUCTILE IRON OR BRASS SADDLE (FORD FS202, 202BS OR APPROVED EQUAL) REQ'D FOR TAPS.

SERVICE TAP AND CONNECTION

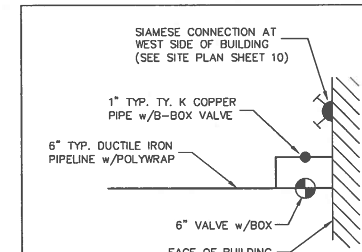

TYPICAL WATER SERVICE DETAIL
(NOT TO SCALE)

Copyright © 2014 Cemcon, Ltd. All rights reserved.

PREPARED FOR:
HARBOR RETIREMENT ASSOCIATES
1440 HIGHWAY A1A
VERO BEACH, FLORIDA 32963
– – – –

CIVIL · ENVIRONMENTAL · MUNICIPAL · EST 1972

PREPARED BY:
CEMCON, Ltd.
Consulting Engineers, Land Surveyors & Planners
2280 White Oak Circle, Suite 100
Aurora, Illinois 60502-9675
Ph: 630.862.2100 Fax: 630.862.2199
E-Mail: cadd@cemcon.com Website: www.cemcon.com

REVISIONS

NO.	DATE	DESCRIPTION	NO.	DATE	DESCRIPTION

CONSTRUCTION DETAILS

HARBORCHASE OF LONG GROVE

FILE NAME: DETAILS	DSGN. BY: KMM	JOB NO.: 814.003	FLD. BK./PG.: ---	SHEET NO. 20 of 20
DIR: 814003	DRN. BY: JGC	DATE: 10-10-14	SCALE: 1" = N.T.S.	