STAFF REPORT

| | |
|---|---|
| TO: | Long Grove PCZBA |
| FROM: | JAMES M. HOGUE, VILLAGE PLANNER |
| DATE: | 5.27.14 |
| RE: | **PCZBA REQUEST 14-05**; CONSIDERATION OF AN AMENDMENT TO THE PREVIOUSLY APPROVED SPECIAL USE PERMIT AND PLANNED UNIT DEVELOPMENT APPROVAL AND/OR ADDITIONAL RELIEF NECESSARY AND/OR APPROPRIATE UNDER THE ZONING CODE INCLUDING BUT NOT LIMITED TO PARKING, BUILDING HEIGHT AND TEMPORARY RELOCATION OFAND EXISTING WIRELESS ANTENNA TO THE NORTHWEST CORNER OF THE SITE TO PROVIDE FOR A SENIOR LIVING AND ASSISTED LIVING CARE FACILITY WITHIN THE VILLAGE OF LONG GROVE, ILLINOIS |

**Item:** PCZBA PETITION 14-05

**Status:** Complete application received 5/6/14. Filing fees & Escrow submitted 5/6/14. Referral by Village Board not required. Publication occurred 5.16.14 and is therefore timely.

**History:** The property is located on the southwest corner of Route 83 and Old McHenry Road. The property in question is comprises Lot 17 of the previously approved Fairfield PUD and consists of 10 acres of land area. This property is presently zoned R-2 PUD.

The property was developed under the approval ordinance for the Fairfield PUD in 1979. Resolution 79-R-15 lays out most of the parameters for the development of this parcel (attached). The property in question is referred to as "Parcel A" and also references the Fairfield Savings & Loan (now Midwest Bank).

Per the parameters of this approval "Parcel A" may contain a total maximum leasable square footage of 85,000 square feet (minus the existing bank building) of office space. This square footage may be contained in multiple structures but shall not have a height in excess of 35 feet. Additionally the petitioner must abide by the setback restrictions (i.e. building box) as identified on the recorded Fairfield PUD plat. The Lot 17 portion of this plat is also attached.

In 2010 an additional special use permit was granted to T-Mobile to allow a personal wireless services antenna (cell tower) on the property so long as the antenna was wholly

enclosed within the existing structure ( Bank building) this approval was conditioned most notably as follows;

E. Equipment. The Equipment must be fully enclosed within the Existing Structure and be used exclusively for the operation and maintenance of the Antenna Facilities.

F. Term; Review. The special use permit and other approvals granted in this Ordinance shall be limited to either the term of any lease agreement for the Antenna Facilities on the Subject Property (including any extension thereof), but in no event for more than 25 years after the passage of this Ordinance. Further, the special use permit and other approvals granted in this Ordinance shall be subject to review by the Board of Trustees, at 10-year intervals, to determine whether changed circumstances exist to require the termination or modification of such special use permit and other approvals. Should the Existing Structure undergo a significant renovation, demolition and rebuild, or substantial change from the plans originally approved by the Village, this special use permit and other approvals granted in this Ordinance shall automatically expire.

**Proposal:** Petitioners are seeking an amendment to the previously approved Special Use Permit\PUD approval known as the Fairfield Village Planned Unit Development and with the R-2 PUD District with relief requested including to building height, and parking to provide for redevelopment of the property as a senior living center ("nursing home") with Memory Care and Assisted Living Facilities on the property and temporary relocation of the existing T-Mobile wireless antenna currently located in the existing building to the northwest corner of the site until March 2015. As proposed the facility would contain 138 units and house 150 patients (beds). Additionally, 90 staff associated (both full and part time) are anticipated to support resident/ patient care at the facility. The facility would be divided into 58 memory care (Alzheimer's/Dementia Care) units and 80 assisted living units. No reclassification of the property is required or requested as "nursing homes" are considered special uses in the residential districts.

As part of the PUD submittal a site plan and engineering (dated 5.2.14) has been included for consideration. A single principal structure is proposed to be located within the existing platted setbacks (save a portion of the entrance canopy). This proposal does not necessitate an amendment to the final PUD Plat. In the past plat amendments have proved to be a major hurdle in efforts to redevelop this property. Elevations of the proposed structure are included in the submittal as well. The existing bank building would be demolished and the cell tower temporarily located on the northwest corner of the site (until 2015).

Access to the site is proposed to be unchanged for what currently exists and is achieved from Route 83 and Aptakisic Road. On-site parking of 126 spaces is proposed. The Village Code does not specify a parking standard for such a use and thereby "defaults" to the standard of 5 spaces per 1000 square feet which would result in 627 spaces being required on-site. The petitioner is requesting relief for this requirement.

Services to the site include Village water provided for the treatment plant at Sunset Grove to the site. The Village water plant was appropriately sized to service this property as well as others. Sanitary sewer is also proposed to service the site. Stormwater will be handled via the existing detention pond in the Fairfield Village Development. This pond currently

handles stormwater from the existing building and parking on-site and was designed to accommodate the build out of this property. The same drainage patterns as presently exist will be maintained on-site. A naturalized bio-swale located along the western edge of the property will be utilized to carry runoff to the off-site detention facility.

Portions of the proposal (e.g. landscaping, elevations, lighting, preliminary plan/plat, and signage) will require Architectural Commission (AC) review. This is anticipated to occur on June 16th. The PCZBA should refer items from the application requiring such review to the AC for the June 16th meeting.

**Land Use, Zoning and Locational Data:**

1. Proposed Zoning: No zoning change requested; to the previously approved Special Use Permit\PUD approval known as the Fairfield Village Planned Unit Development and with the R-2 PUD District with relief requested including to building height, and parking to provide for redevelopment of the property as a senior living center ("nursing home").

2. Surrounding Land Uses and Zoning;

| *Direction* | *Existing Use* | *Land Use Plan Designation/Zoning* |
|---|---|---|
| **NORTH** | Office | Office; R-2 PUD |
| **SOUTH** | Multi-Family Residential | Village of Buffalo Grove\R-9 MFR District |
| **EAST** | Vacant\Agricultural | Commercial\Office; R-2 |
| **WEST** | Residential (Fairfield Village) | Residential; R-2 PUD |

3. Location; The property is located on the west side of the intersection of Route 83 and Route 53 and is presently the site of the Midwest Bank Building (to be razed) – 1190 Old McHenry Road .

4. Acreage; The property (Lot17 - Fairfield Village PUD contains approximately 10 +/- acres of land area.

5. Based upon information available through Lake County GIS, the property if free from FEMA Floodplain, Flood of Record area and/or wetlands (LCWI & ADID). (See Maps).

6. Topography; See attached Map from Lake County GIS.

| Zoning Data | Existing | Proposed | Zoning Code (R-2 Standard) | PUD |
|---|---|---|---|---|
| Lot Area | 435,908 sq. ft. | 435,908 sq. ft. | 2 acres (87,120 sq. ft.) | N/A |
| Floor Area (Total Floor Area) | 17,970 sq.ft. * | 125,430 sq. ft. | N/A | 85,000 sq. ft. |
| Lot Coverage (In Square Feet) | UNKNOWN | 193,283 sq. ft (45.63%) | 40% | N/A |
| Height | 35' | 42'** | 35' | 35' |

* Midwest Bank Bldg square footage –building to be razed.

** 42' on cupola feature only; principal structure will be 35 feet tall.

**Yard Requirements (set-backs);**

| | Existing | Proposed** | Zoning Ordinance (R-2 Standards) | P.U.D. * |
|---|---|---|---|---|
| Front Yard (East/ Rt. 83) | 172' | 119.35' | 75' | 125' |
| Side Yard (North) | 502' | 190.48' | 40' | 175' |
| Front Yard (South Rt. 53 ) | 183' | 180.44' | 40' | 175' |
| Rear Yard (West) | 306' | 202.18 | 40' | 200' |

* Setback to building box per approved PUD plat.

** All proposed structures to be placed in the building box except a portion of the "At Porte Cochere – East side of structure

**Issues/ Conclusions:**

**a. Traffic** - A complete traffic study has not been submitted with the proposal. Petitioner has submitted a traffic narrative using ITE (Institute of Traffic Engineers) Trip Generation Manuel data. Conclusions per that data indicate that most residents are not self mobile. The facility does provide transportation (shuttles) for residents, family and staff for "special events", shopping, and excursions thereby reducing trips generated from the site. Families and visitors typically visit the facility on weekend end or after work which are during non-peak commuting hours.

Traffic generated by Staff constitutes the bulk of traffic on site. Twenty to thirty staff members and care givers are anticipated on-site at any given time. Shifts are proposed to be staggered from 7-to 3, 3 to 11 and 11 to 7 thereby missing peak commuting times.

It is anticipated that the proposed use should have minimal impact to traffic on Route 53, Route 83 and Old McHenry Road and the surrounding roadway network and likely have less traffic impact than office uses anticipated for the site per the PUD approval.

**Internal Circulation & Parking**

Internal circulation will remain more or less consistent with the existing traffic pattern of the bank. Parking will be principally on the west side of the structure adjacent to the building thereby serving to minimize impacts to the existing residential uses to the west.

Ingress and egress will remain the same at currently exists. Access to the site is via Robert Parker Coffin Road (across the adjacent medical building property to the north), Route 83 (right-in right-out only) and full access at Old McHenry Road.

The old McHenry Road access is controlled by the Lake County Department of Transportation (LCDOT) and was predicated on "office" use for the property. In order to maintain this access petitioner need to demonstrate to LCDOT that the proposed use is less intense than the office use currently anticipated under the access permit issued by LCDOT. Initial contact with LCDOT engineers indicate that the use a proposed would be less a less intense use and that full access to Old McHenry Road may be maintained.

The petitioner is seeking relief from the parking standards for the proposed use. The Village Code does not specify a parking standard this specific uses. Parking therefore defaults to the general standard of 5 spaces per 1000 square feet of floor area or 627 spaces for the proposed use. Given the nature of the proposed use this amount of parking appears excessive. By comparison, the Sunset Grove across the street maintains 641 spaces for that development which is commercial in nature.

Petitioner proposes 126 total spaces (121 regular stalls & 5 handicapped spaces) on-site.

Research by staff (See Attached "Senior Housing Trip Generation and Parking Demand Characteristics") indicates parking of .03 to .05 spaces per bed (including employee, visitor and resident parking) is a typical "peak demand" for parking this type of use. Using the patient total of 150 (i.e. number of beds) and the proposed parking 126 spaces a ratio of .80 parking spaces to beds is achieved. This exceeds the typical "peak demand" for parking in this instance.

A pathway system is also proposed in the development and would be placed along the berm in the Scenic Corridor Easement.

**b. Services**

**Water** - The site will be served by Village water from the treatment plant at Sunset Grove. Water has been stubbed to the site. This site was anticipated to be serviced by Village water and capacity has been built into the system to accommodate this use.

Watermain will be looped from a 10" main on the south around the west and north side of the proposed building to the existing waterman on Route 83. A 6' water service will connect to the building on both the east and west side of the property.

**Sewer** - The bank building is presently connected to sanitary sewer located to the south of the property in the Route 53 right-of-way.

Sanitary Sewer service is proposed on the west side of the building. A 6" PVC line will connect to an existing sanitary line on the west side of the property and continue to travel west along an existing sanitary sewer line.

**Stormwater** - Stormwater is proposed to flow from east to west on the site and collect in an improved bio-swale located on the western edge of the property and flow into the existing detention pond in Fairfield Village. Drainage plans for Fairfield Village appear to indicate that stormwater management from this site was to be achieved in this pond. Details on stormwater demand and capacity have not been submitted save the preliminary narrative for stormwater management submitted with the application.

**Elevations**

Petitioner has submitted elevations for the proposed structure. As proposed the structure would be two stories tall with building height of 35 feet or less. The only exception to the build height is cupola proposed in the center of the structure. This feature is largely decorative and serves to mirror the architecture in the Sunset Grove Development. Petitioner has asked for relief from the 35' height maximum for the cupola in this proposal.

A small portion of the entrance canopy (the "At Porte Cochere) on the east side of the structure encroaches beyond the building setback but is located outside of the scenic corridor area. Petitioners indicate this structure is necessary to the facility from both the practical and aesthetic perspectives of the building.

The structure will be constructed largely of masonry (brick) and hardi-board exterior with stone accents and an asphalt shingle roof. Elements the building façade were designed to capture the essence of the Sunset Grove development across the street.

Trash enclosure elevations have been submitted as well. These will be constructed of brick on three sides with lockable wood plank gates across the opening.

It is recommended that the elevations be reviewed by the AC.

## Lighting

Proposed lighting is best classified as "Class 2" Lighting per the Village Code. Lighting of this nature requires AC review and approval.

30 fixtures are proposed for site illumination. Fixtures would be 18' feet in height with 21" & 18" arm mounts. 5 fixtures in the west parking area would have double mount fixtures. Fixtures taller than 15' require AC review and approval. LED light sources are proposed as well.

Photometrics for the site have been submitted along with proposed fixtures for the site. Per this plan light does not escape from the site with the exception of the ingress & egress points and along "Fairfield Drive" which abuts the medical center to the north.

## Landscaping

Petitioner has submitted landscape plan for consideration by the PCZBA. As is practical existing trees on-site will be preserved.

The existing 40' buffer yard along the west side of the property will remain as platted and be enhanced with additional planting. As proposed plantings will be largely native shade and ornamental trees. Evergreen trees will also be used and in particular along the western landscape easement.

AC review of the landscape plan is also required.

## Signage

Preliminary signage indicates a ground sign of approximately 18 square feet is contemplated for the site. Location is not identified by presumed to be near an entrance to the structure. Signage may or may not be illuminated at this point. AC review of signage is also required.

## Preliminary PUD Plan / Plat

Although no re-subdivision of the property is anticipated a preliminary plan plat is required. This plan identifies particular feature of the development and two items for PCZBA consideration;

First, alterations to the existing berms, including pathways are contemplated. Per the Village Subdivision code modifications may be allowed as follows;

Plan Approval: As a condition of approval of a final plat, the developer shall submit a development plan of all scenic corridor easements, showing the dimensions thereof, the extent and nature of all significant natural vegetation, both forest and prairie, all berms sought to be constructed, the amount and size and type of all planting sought to be installed. The plan shall be reviewed and approved by the plan commission. (Ord. 2000-O-17, 8-8-2000)

Staff interprets this to include pathways along/within the bermed areas as well.

Second, demolition of the bank building necessitates that something be done with the cell tower (per the lease agreement). Petitioner proposes that this structure be placed temporarily in the northwest corner of the property until such time as the current lease expires (March 2015). Petitioners would prefer the tower be located off this site.

## Comprehensive Plan Compliance

This property is part of the "Downtown Master Plan" adopted by the Village in 2008. This document anticipates redevelopment of this property as part of the "Illinois Route 53 Sub-District". Specific land uses are not identified as part of this plan.

However, the proposal has many characteristics which serve to implement general goals and objectives of the Village namely;

- Extension of the pathway system; a proposed a segment would connect the Old McHenry Road pathway to closer to the pathways in the Sunset Grove Development.
- Enhanced site improvements including parking, landscaping and other amenities which improve the "gateway' status of the site.
- The opportunity for enhanced gateway and wayfinding amenities linked to the downtown.

Land use is proposed to change from the anticipated/ approved office use to and institutional/residential use. This use, arguably, is less intense than the office use anticipated for the site, generates less traffic and provides a nice transition between the commercial uses on the east of Route 83 and the residential uses which abut the site to the west.

## Issues for PCZBA Consideration

The following issues are noted per staff review of the proposal. This list may not be all inclusive as further issues may arise as part of the public hearing process.

- Consideration of requested relief for building height from 35' to 42' feet;
- Consideration of relief from the parking requirement to allow 126 spaces;
- Use of property as a "nursing home" instead of the anticipated "office use";
- Temporary relocation of the existing cell tower;
- Referral of signage, landscaping, lighting, site plan/plat and building elevations to the June 16th AC meeting;
- Reconfiguration of the existing berms, including the inclusion of pathways;
- Encroachment of the entrance canopy ("At Porte Cochere) beyond the building box;

Respectfully Submitted,

*James M. Hogue*

**James M. Hogue**
**Village Planner**

# SENIOR HOUSING TRIP GENERATION AND PARKING DEMAND CHARACTERISTICS

by

**Stephen B. Corcoran, P.E. (M)[a]**

**presented at the**
**Institute of Transportation Engineers**
**66th Annual Meeting**

## INTRODUCTION

As the baby boomer generation ages, special housing projects have been developed for them in lieu of the traditional single-family home or apartment. Congregate care facilities, independent living apartments, assisted-care units, and senior apartments are being marketed, developed, and built to handle the needs of older adults.

The changing lifestyle of older adults affects their transportation needs and usage as well. Trip generation and parking demand within this age group vary significantly from traditional residential uses because residents no longer have to be at work, pick up their children, or do their shopping at specific times. Also many senior communities provide on-site services to meet their residents' needs. This paper will present the author's experiences with senior housing and its trip and parking characteristics along with data on projects in suburban Chicago, Illinois and around the United States.

## SENIOR HOUSING TYPES

Older adults have many special needs that change over time. Many seniors are clearly independent and need little assistance other than help with major chores or repairs. They are generally active and healthy. As time goes by, however, their needs change and grab bars become important, as well as, other features such as higher electrical outlets, emergency response systems, and lower reach cabinets. Good nutrition, socialization, and access to medical and supportive care also becomes more important. Several distinct types of housing have been developed to accommodate these needs:

**Senior Single Family Homes** are senior-only subdivisions which have been developed for retirees ages 55 and up in the southeast and southwest sections of the United States. These developments typically include recreational facilities. Many of the residents are retired.

**Senior Apartments** are traditional apartment complexes with a minimum age requirement of 55 years old. Some amenities include recreational facilities, security, and special design features. Residents are independent and may still be working.

**Independent Living Units** are cottages or apartments were older adults live independently but without the worries of maintenance or housekeeping. Medical care can be available at the facility or by visiting medical staff. A variety of amenities are provided for the residents depending on the size of the community.

[a] Senior Transportation Consultant, Metro Transportation Group, Inc, Hanover Park, Illinois

**Assisted-Care Units** are for older adults having difficulty managing in an independent living arrangement but who do not need nursing home care. Assisted-care is usually apartment living with additional staff to help with normal daily activities.

**Congregate Care Facilities** contain a full spectrum of housing types in one development with town homes or cottages, independent living units, assisted-care units, and nursing care. Congregate Care Facilities (CCF) allow the elderly to age in one place with nursing care available if they need it. This is particularly important for elderly couples wishing to stay together with one spouse needing special care. CCFs are in essence self-contained communities. **Table 1** lists the amenities that are typically available at a CCF.

**Table 1**

**Typical Congregate Care Facility On-Site Services and Facilities**

| Standard Services | Extra Services | Common Facilities |
|---|---|---|
| • Main Meal of the Day | • Breakfast and Lunch | • Lounge Area |
| • 24-Hour Nursing | • Extended Room Service | • Dining Room |
| • Daily Check-In | • Specialized Diets | • Library |
| • Weekly Laundry | • Guest Meals | • Chapel |
| • Utilities | • Catering | • Recreation Room |
| • Housecleaning | • Physician | • Country Store |
| • Organized Programs | • Podiatrist | • Pharmacy |
| • In Room Food Service | • Physical/Speech Therapy | • Arts and Crafts Room |
| • Bus Shuttle | • Insurance | • Workshop |
| • 24-Hour Security | • Chauffeur Service | • Cafe |
| • Complete Maintenance | • Garages | • Exercise Room |
| • Free Parking | • Telephone | • Beauty/Barber Shop |
| • Garbage Collection | • Cable TV | • Bank Branch Office |
| • Notary Public Service | • Photocopying | • Solarium |
| • Supportive Care Nurse | | • Whirlpool |
| • Chaplain | | • Outside Patio |
| | | • Garden Plots |

Source: Milwaukee, Wisconsin CCF Brochure

## LITERATURE REVIEW

A review was made of available data on senior trip generation and parking demands. Information was obtained from the Institute of Transportation Engineers Trip and Parking Generation Manuals, the author's files, data from other consultants, as well as, information from California, Arizona, and Florida Departments of Transportation. After reviewing the data, it became clear that the amount of data is small and that the definition of senior housing was not consistent among each source. The data did not distinguish between the five categories mentioned previously.

## FACTORS AFFECTING TRIP GENERATION AND PARKING

Several factors affect the trip generation and parking demand at any particular facility. These include the number of dwelling units, nursing beds, average age of residents, resident's affluence, number of employees, and available bus shuttle/chauffeur service. More data needs to be collected in order to properly analyze their relationship to trip generation and parking demand. The trip generation rates for individual facilities varied. Insufficient information on all the survey locations made it difficult to statistically draw conclusions on individual impact of those factors.

However, experience has indicated that as the average age of residents increases, the number of trips and parking demand decreases. This is an obvious affect of the aging process. Nursing beds require more staff to service a patient needs than a more independent resident. When the proportion of nursing beds to residential units increases, the amount of traffic and parking generally increase. The economic well being of residents increases the likelihood that they own a car and thus drive and park. Lastly, bus shuttle/chauffeur service will provide an option to the auto for residents keeping traffic and parking rates lower.

## DAILY TRAFFIC GENERATION

Information on daily trip ends was obtained from surveys by the California Department of Transportation (Caltrans) and the Florida and Arizona Departments of Transportation. This data generally categorized the facilities as retirement communities but included CCFs, senior apartment complexes, and may have nursing beds. The author's data consisted of one CCF in Pennsylvania. **Table 2** summarizes the trip data and rates. The average trip rate daily varied between 2.78 and 8.91 trips per unit. The variation in rates supports the conclusion that the number of units/beds is not the only variable influencing trip production. The weighted average trip ends were 4.52 trips per unit which included one large development of 3,122 units. Without the 3,122 unit project, the weighted average rate was 5.64 trips per units.

The weighted daily trip generation rate, was 5.64 trip ends a day for senior housing developments. Senior housing generates two-thirds the amount of traffic compared to a typical single-family development. It's closer to other multi-family categories, including apartments (6.47 trips/unit) and condominiums or townhouses (5.86 trips/units). **Table 3** shows the weekly variation in volumes based on one facility. The weekday volumes were consistent. Weekend traffic volumes were slightly lower.

**Table 4** illustrates the hourly distribution of traffic throughout an average weekday, Saturday, and Sunday. The peak-hour volumes of the facility occurred at lunch time and mid-afternoon (2:00 to 4:00 PM). Caltrans data indicated that the peak-hour occurred between 11:00 AM and 4:00 PM, depending on the facility. These peak-hour times do not coincide with the peak-hour of adjacent street traffic because the residents do not have or want to travel during the rush hour. Also, the employee shifts are generally off peak. Most facilities are staffed 24 hours a day with a 7:00 AM-3:00 PM, 3:00 PM -11:00 PM, 11:00 PM-7:00 AM shift schedule. Some administrative staff follow a typical 9:00 AM to 5:00 PM shift.

## PEAK-HOUR TRIP GENERATION RATES

**Table 5** shows the trip generation rates for eight facilities during the morning and evening peak-hour of the adjacent street system. The weighted average trip rate was 0.222 trips per unit/bed in the morning peak and 0.247 trips per unit/bed in the evening peak. Trip rates ranged from 0.085 to 0.450 per unit. The directional splits were 65% inbound and 35% outbound in the morning and 40% inbound and 60% outbound in the evening. Compared to other residential land-uses, senior developments generate significantly less traffic on a per unit basis.

**Table 2**

**Daily Trip Generation Rates for Senior Housing**

| Source | Number of Dwelling Units | Daily Trips | Trip Rates |
|---|---|---|---|
| Caltrans | 3122 | 9630 | 3.09 |
| | 300 | 830 | 2.78 |
| | 108 | 310 | 2.87 |
| | 76 | 260 | 3.42 |
| | 460 | 2252 | 4.90 |
| Florida DOT | 366 | 3262 | 8.91 |
| | 560 | 1985 | 3.55 |
| | 187 | 1449 | 7.75 |
| | 120 | 901 | 7.51 |
| | 127 | 561 | 4.42 |
| Arizona DOT | 125 | 972 | 7.78 |
| | 176 | 855 | 4.86 |
| | 74 | 447 | 6.04 |
| | 60 | 285 | 4.75 |
| | 216 | 1386 | 6.42 |
| | 175 | 1058 | 6.05 |
| | 129 | 941 | 7.30 |
| | 112 | 922 | 8.23 |
| | 106 | 820 | 7.74 |
| | 89 | 538 | 6.05 |
| | 81 | 529 | 6.53 |
| | 60 | 494 | 8.23 |
| | 59 | 432 | 7.30 |
| Penn. CCF | 247 | 1163 | 4.71 |
| **Weighted Average** | **7135** | **32282** | **4.52** |
| **Without 3,122 units** | **4013** | **22652** | **5.64** |

**ITE Average Weekday Daily Rates**

| | |
|---|---|
| Single-Family (Code 210) | 9.55 |
| Apartment (Code 220) | 6.47 |
| Condo/townhouse (Code 230) | 5.86 |
| Congregate Care Facility (Code 251) | 2.15 |

**Table 3**

**Weekly Volume Distribution**

| Day of the Week | Percentage |
|---|---|
| Monday | 15% |
| Tuesday | 15% |
| Wednesday | 16% |
| Thursday | 17% |
| Friday | 15% |
| Saturday | 12% |
| Sunday | 10% |
| Total | 100% |

**Table 4**

**Hourly Traffic Distribution**

| Start Hour | Average Weekday | Saturday | Sunday |
|---|---|---|---|
| 12:00 AM | 1.46% | 1.45% | 2.76% |
| 1:00 AM | 0.07% | 0.12% | 0.26% |
| 2:00 AM | 0% | 0.00% | 0.26% |
| 3:00 AM | 0.12% | 0.00% | 0.00% |
| 4:00 AM | 0.46% | 0.00% | 0.66% |
| 5:00 AM | 0.41% | 0.60% | 0.39% |
| 6:00 AM | 1.94% | 2.05% | 1.71% |
| 7:00 AM | 5.74% | 5.06% | 3.94% |
| 8:00 AM | 6.70% | 5.06% | 4.99% |
| 9:00 AM | 6.19% | 5.78% | 6.17% |
| 10:00 AM | 7.20% | 9.40% | 7.74% |
| 11:00 AM | 9.33% | 9.04% | 8.53% |
| 12:00 PM | 7.05% | 8.07% | 8.01% |
| 1:00 PM | 7.44% | 6.27% | 4.86% |
| 2:00 PM | 9.76% | 7.59% | 8.40% |
| 3:00 PM | 9.54% | 10.24% | 9.84% |
| 4:00 PM | 8.39% | 9.40% | 9.32% |
| 5:00 PM | 5.26% | 6.14% | 6.96% |
| 6:00 PM | 3.14% | 3.25% | 3.54% |
| 7:00 PM | 2.90% | 2.89% | 4.20% |
| 8:00 PM | 2.59% | 2.05% | 2.49% |
| 9:00 PM | 1.10% | 1.57% | 1.31% |
| 10:00 PM | 1.24% | 1.33% | 1.05% |
| 11:00 PM | 1.96% | 2.65% | 2.62% |

**Table 5**

**Peak-Hour Trip Generation Rates**

| Facility | Location | Occupied Units: Dwelling Units | Occupied Units: Nursing Beds | Total | AM Peak Volume | Rate | PM Peak Volume |
|---|---|---|---|---|---|---|---|
| Covenant Village | Northbrook, IL | 220 | 151 | 371 | 86 | .231 | 133 |
| Friendship Village | Lombard, IL | 620 | 100 | 720 | 86 | .120 | 180 |
| Presbyterian Home | Evanston, IL | 312 | 166 | 478 | 92 | .193 | 139 |
| Glenview Terrace | Glenview, IL | 243 | | 243 | | | 21 |
| Good Shephard Manor | Barrington, IL | 102 | | 102 | 18 | .180 | 17 |
| Mayslake | Oakbrook, IL | 630 | | 630 | 67 | .106 | 75 |
| Leisure Village | New Jersey | 200 | | 200 | 65 | .325 | 62 |
| Pennsylvania CCF | | 210 | 37 | 247 | 78 | .316 | 111 |
| | **Totals** | **2537** | **454** | **2991** | **492** | | **738** |
| | | **Weighted Average Trip Rate** | | | **.164** | | **.247** |
| | | | | **Inbound Percentage** | **65%** | | **40%** |
| | | | | **Outbound Percentage** | **35%** | | **60%** |
| **Comparison to other ITE Residential Rates** | | | | | | | |
| Single Family Homes (Land Use Code 26) | | | | | 0.74 | | 1.01 |
| Apartments (Land Use Code 220) | | | | | 0.51 | | 0.63 |
| Condominiums/Townhouses (Land Use Code 230) | | | | | 0.44 | | 0.55 |

## PARKING DEMAND SURVEYS

Parking demand characteristics were obtained from a number of surveys conducted in the Chicago metropolitan area The peak parking demand occurred during the mid-day between 11:00 AM to 3:00 PM corresponding, in part, with the largest employee shift on-site. **Table 6** summarizes those surveys. The peak day of the year is Mother's Day when many facilities run out of visitor parking, according to the on-site staff.

The peak parking demand rates varied between 0.214 and 0.579 vehicles per unit/bed with a weighted average rate of 0.404 vehicles per unit/bed. Employee, resident, and visitor parking is included. This rate is one third to one half the parking rate of other residential uses. Readers should note that the survey sites with the higher parking rates generally have more nursing beds which requires more employees than the residential units.

**Table 6**

**Peak Parking Demand Surveys**

| Development | Location | Dwelling Units | Nursing Beds | Total Units/Beds | Peak Parking Rate | Peak Parking Demand |
|---|---|---|---|---|---|---|
| Covenant Village | Northbrook, IL | 220 | 151 | 371 | 0.490 | 182 |
| Beacon Hill | Lombard. IL | 235 | 23 | 258 | 0.565 | 146 |
| Friendship Village | Schaumburg, IL | 620 | 100 | 720 | 0.390 | 281 |
| Presbyterian Home | Evanston, IL | 312 | 166 | 478 | 0.579 | 277 |
| Glenview Terrace | Glenview, IL | 243 | | 243 | 0.214 | 52 |
| Mayslake | Oakbrook, IL | 630 | | 630 | 0.408 | 257 |
| EJM Engineering Studies | | | | | | |
| Lilac Lodge | Waukegan, IL | 203 | | 203 | 0.315 | 64 |
| Deerfield Place | Deerfield. IL | 98 | | 98 | 0.230 | 23 |
| ITE Parking Manual, 2nd Ed | | | | | | |
| Retirement Community (Land Use Code 250) | | 500 | | 500 | 0.270 | 135 |
| | | 3061 | 440 | 3501 | | 1417 |
| | | **Weighted Average** | | | **0.404** | |
| ITE Parking Manual, 2nd Edition | | | | | | |
| Low/Mid-Rise Apartments (Land Use Code 221) | | | | | 1.21 | |
| High-Rise Apartments (Land Use Code 222) | | | | | 0.88 | |
| Residential Condominium (Land Use Code 230) | | | | | 1.11 | |

## Conclusions

Based on the analyses and studies for this paper, the following findings were made:

1. The overall category of senior housing should be broken down into at least five categories for trip generation and parking demand purposes. These categories could be:

- Senior Single-Family Housing
- Senior Apartments
- Independent Living Units
- Assisted-Care Units
- Congregate Care Facility

2. Several factors affect the trip generation and parking demand at any particular facility. Any new survey should include the number of dwelling units, nursing beds, average age of residents, resident's affluence, number of employees, and available bus shuttle/chauffeur service. More data needs to be collected in order to properly analyze their relationship to trip generation and parking demand.

3. Daily trip generation rates were found to be 4.52 to 5.64 trip ends a day for senior housing developments. Senior housing generates two-thirds the amount of traffic compared to a typical single-family development. It's daily rates are similar to other multi-family categories, including apartments (6.47 trips/unit) and condominiums/townhouses (5.86 trips/units).

4. Trip generation rates during the peak hour of adjacent street traffic are significantly less because most employees arrive/depart during off-peak periods and residents avoid the peak-hour congestion. The peak hour rates are one-half to one-fourth that of other residential land-uses.

5. The peak-hours of site traffic occurs in the late-morning or early afternoon.

6. The peak parking demand at most senior facilities occurred midday with an average peak demand of 0.40 vehicles per dwelling unit for residents, employees, and visitors. Mother's Day is the highest parking day of the year with many facilities short of spaces for that one day.

## References


1. Trip Generation Manual, 5th Edition; Institute of Transportation Engineers; January, 1991
2. Parking Generation Manual, 2nd Edition; Institute of Transportation Engineers; August, 1987
3. Parking Requirements for Retirement Centers Requirements and Demands; EJM Engineering; May, 1987
4. 6th Progress Report of Trip Ends Generation Research Counts; California Department of Transportation; 1965-1970
5. Florida Department of Transportation Trip Generation Data
6. Arizona Department of Transportation Trip Generation Data

LEGAL NOTICE
VILLAGE OF
LONG GROVE, ILLINOIS
NOTICE OF A PUBLIC HEARING FOR CONSIDERATION OF AN AMENDMENT TO THE PREVIOUSLY APPROVED SPECIAL USE PERMIT AND PLANNED UNIT DEVELOPMENT APPROVAL AND/OR ADDITIONAL RELIEF NECESSARY AND/OR APPROPRIATE UNDER THE ZONING CODE INCLUDING BUT NOT LIMITED TO PARKING, BUILDING HEIGHT AND TEMPORARY RELOCATION OFAND EXISTING WIRELESS ANTENNA TO THE NORTHWEST CORNER OF THE SITE TO PROVIDE FOR A SENIOR LIVING AND ASSISTED LIVING CARE FACILITY WITHIN THE VILLAGE OF LONG GROVE, ILLINOIS

PUBLIC NOTICE IS HEREBY GIVEN that on Tuesday, June 3, 2014 at 7:00 p.m., a public hearing will be held at the regular meeting of the Plan Commission & Zoning Board Appeals of the Village of Long Grove, Lake County, Illinois, at the Long Grove Village Hall, 3110 RFD, Long Grove, Illinois 60047, (unless otherwise posted) for an amendment to the previously approved Special Use Permit and Planned Unit Development approval known as the Fairfield Village Planned Unit Development and with the R-2 PUD District and/or additional relief necessary and/or appropriate under the zoning code including but not limited to building height, and parking to provide for a senior living center with Memory Care and Assisted Living Facilities on the property and temporary relocation of the existing T-Mobile wireless antenna currently located in the existing building to the northwest corner of the site until March 2015. No reclassification of the property is requested. The property is legally described as follows:

Lot 17 in the Fairfield Village (except those parts taken for road by instrument recorded as Document 3186932), being a subdivision in the East1/2 of the Northwest 1/4 and West 1/2/ of the Northeast ¼ of Section 30, Township 43 North, Range 11, East of the Third Principal Meridian, according to the plat thereof Recorded January 4, 1980 as document 2042549 and corrected by Certificate of Correction recorded April 7, 1980 as Document 2055570, in Lake County, Illinois.

Commonly known as: 1190 Old McHenry Road, Long Grove, Illinois, 60047.
PIN: 15-30-205-019

Persons attending the hearing shall have the opportunity to provide written and oral comments and questions concerning the proposal. The above information, together with the plans for the property, will be available for inspection at the Long Grove Village Hall, 3110 RFD, Long Grove, Illinois during regular business hours.

The Plan Commission & Zoning Board of Appeals reserves the rights to continue the hearing to a later date and time and place should that become necessary.

James M. Hogue
Village Planner
Village of Long Grove
Published in Daily Herald May 16, 2014 (4373904)

RECEIVED
MAY 19 2014
VILLAGE OF LONG GROVE

# CERTIFICATE OF PUBLICATION

**Paddock Publications, Inc.**

**Daily Herald**

Corporation organized and existing under and by virtue of the laws of the State of Illinois, DOES HEREBY CERTIFY that it is the publisher of the **DAILY HERALD**. That said **DAILY HERALD** is a secular newspaper and has been circulated daily in the Village(s) of Algonquin, Antioch, Arlington Heights, Aurora, Barrington, Barrington Hills, Lake Barrington, North Barrington, South Barrington, Bartlett, Batavia, Buffalo Grove, Burlington, Campton Hills, Carpentersville,Cary,Deer Park, Des Plaines, South Elgin, East Dundee, Elburn, Elgin,Elk Grove Village, Fox Lake, Fox River Grove, Geneva, Gilberts,Grayslake, Green Oaks, Gurnee, Hainesville, Hampshire, Hanover Park,Hawthorn Woods, Hoffman Estates, Huntley, Inverness, Island Lake,Kildeer, Lake Villa, Lake in the Hills, Lake Zurich, Libertyville,Lincolnshire, Lindenhurst, Long Grove, Mt.Prospect, Mundelein,Palatine, Prospect Heights, Rolling Meadows, Round Lake, Round Lake Beach,Round Lake Heights,Round Lake park,Schaumburg, Sleepy Hollow, St. Charles, Streamwood, Tower Lakes, Vernon Hills, Volo, Wauconda, Wheeling, West Dundee, Wildwood, Sugar Grove, North Aurora

County(ies) of Cook, Kane, Lake, McHenry
and State of Illinois, continuously for more than one year prior to the date of the first publication of the notice hereinafter referred to and is of general circulation throughout said Village(s), County(ies) and State.

I further certify that the DAILY HERALD is a newspaper as defined in "an Act to revise the law in relation to notices" as amended in 1992 Illinois Compiled Statutes, Chapter 7150, Act 5, Section 1 and 5. That a notice of which the annexed printed slip is a true copy, was published May 16, 2014 in said DAILY HERALD.

IN WITNESS WHEREOF, the undersigned, the said PADDOCK PUBLICATIONS, Inc., has caused this certificate to be signed by, this authorized agent, at Arlington Heights, Illinois.

PADDOCK PUBLICATIONS, INC.
DAILY HERALD NEWSPAPERS

BY Paula Baltzer
Authorized Agent

Control # 4373904

# Recommendations:
# Long-term Vision

1. Improve pedestrian connections between Downtown and the Buffalo Creek Trail
2. Expand trails along Buffalo Creek to strengthen connections to Downtown and regional trail systems
3. Relocate fire station to accommodate new commercial development
4. Install additional plantings within the medians on Old McHenry Road
5. Make premium landscaping enhancements at the Illinois Route 53 / Illinois Route 83 intersection to emphasize Downtown gateway location
6. Create a new signature public open space in the Triangle Sub-district that fronts onto Old McHenry Road
7. Preserve existing natural areas south of Illinois Route 53 and improve pedestrian connections to them
8. Create new multi-modal pathways along Illinois Route 83
9. Create new stormwater management facility south of Downtown
10. Improve and reconstruct road and streetscape on Old McHenry Road and Robert Parker Coffin Road - See page 18 for existing and proposed sections
11. Install additional plantings within the medians on Illinois Route 83 north of the Illinois Route 53 intersection
12. Reorganize Stempel Parking Lot and merge properties to make entire lot public property
    **Parking lots are conceptual, actual layout to be determined*
13. Reorganize privately-owned parking to expand capacity and improve access and circulation
    **Parking lots are conceptual, actual layout to be determined*
14. Redevelop property at the western corner of the Old McHenry Road / Robert Parker Coffin Road intersection
15. Create a new green space in privately owned parking lot
16. Preserve Towner Green as open space
17. Redevelop gas station property to new retail / commercial service use
18. Improve amenities at Fountain Square
19. Redevelop Triangle Sub-district around signature public open space with various commercial and retail businesses and / or community center
20. Create a new local street network in the Triangle Sub-district that aligns with existing streets and includes on-street parking
21. Build gateway commercial development at the intersection of Old McHenry Road and Illinois Route 53
22. Redevelop the Illinois Route 53 Sub-district
23. Develop parcels south of Illinois Route 53
24. Retain natural areas along Illinois Route 83
25. Redevelop the Illinois Route 83 Sub-district with commercial, retail, hospitality, residential, and office uses
26. Redevelop Triangle Sub-district
27. Relocate or bury overhead utility / electric lines

Long Grove Downtown Master Plan - Long Term Vision

# HARBORCHASE OF LONG GROVE

## VILLAGE OF LONG GROVE

## ZONING APPLICATION / PRELIMINARY PLANNED UNIT DEVELOPMENT

Petitioner seeks approval of an amendment to the Fairfield Village Planned Unit Development within the Village of Long Grove to construct and operate an assisted living facility with a memory care neighborhood. The proposed HarborChase of Long Grove shall be located on Lot 17 in Fairfield Village Subdivision commonly known as 1190 Old McHenry Road. HarborChase of Long Grove will not be detrimental to or endanger the public, health, safety, and general welfare, nor will it diminish or impair property values within the neighborhood.

The subject property currently has an unoccupied bank structure and is zoned R2 Planned Unit Development within the Village of Long Grove. Therefore, the request to amend the current Planned Unit Development to allow for a nursing home is consistent with the Village of Long Grove's Downtown Long Grove Master Plan and the Village's Zoning Code. The Village's Zoning Code allows for a nursing home use as a special use within its residential districts. The proposed project shall construct a 125,430 S.F. facility that will house eighty (80) assisted living units and fifty-eight (58) memory care units. The petitioner is requesting the following relief from the Village's Zoning Ordinance:

**Chapter 9**

**Section: 5-9-4 Off Street Parking**

The Village's Zoning Code does not require a specific parking ratio for a nursing home use and, therefore, the general ratio of five (5) parking spaces for each 1,000 square feet of gross floor area shall apply. Based on a 125,430 S.F. facility, the required parking is 627 spaces. Providing 627 parking spaces for an assisted living / memory care facility of this size is excessive and would create a site that is mostly impervious and would create a parking lot that is severely under-used. Most of the residents within the facility are no longer self-mobile and can no longer drive a motorized vehicle. Therefore, the petitioner is requesting a variance to reduce the amount of parking spaces to 126, which is in line with the assisted living / memory care industry. The vast majority of residents within these facilities do not drive and therefore a larger amount of parking is not necessary.

**Chapter 3**

**Section: 5-3-12 Bulk, Space, & Yard Requirements**

The Village's Zoning Code limits building height to thirty-five (35) feet. The proposed HarborChase of Long Grove facility is thirty-one (31) feet and two (2) inches to the roof ridge for the entire building with the top of the cupola (architectural feature) at forty-two (42) feet. Therefore, the petitioner is requesting a variance for the height requirement in the R2 zoning district to allow the cupola to reach forty-two (42) feet in height.

The current structure on the site has a T-Mobile antenna located within the building structure, which has a lease until March, 2015. The petitioner is requesting to relocate said antenna temporarily to the northwest corner of the site for the purpose of constructing the proposed building.

HarborChase of Long Grove will provide a service that is needed within the community and, therefore, promotes the public health, safety, comfort, convenience, and general welfare and complies with the policies, official land use plan, and other official plans of the Village.

# A.L.T.A./A.C.S.M.
# LAND TITLE SURVEY

## NORTHWEST CORNER OF ILLINOIS ROUTE 53/ILLINOIS ROUTE 83
## 1190 OLD MCHENERY ROAD, LONG GROVE, ILLINOIS.

SHEET 1 OF 1

## VICINITY MAP

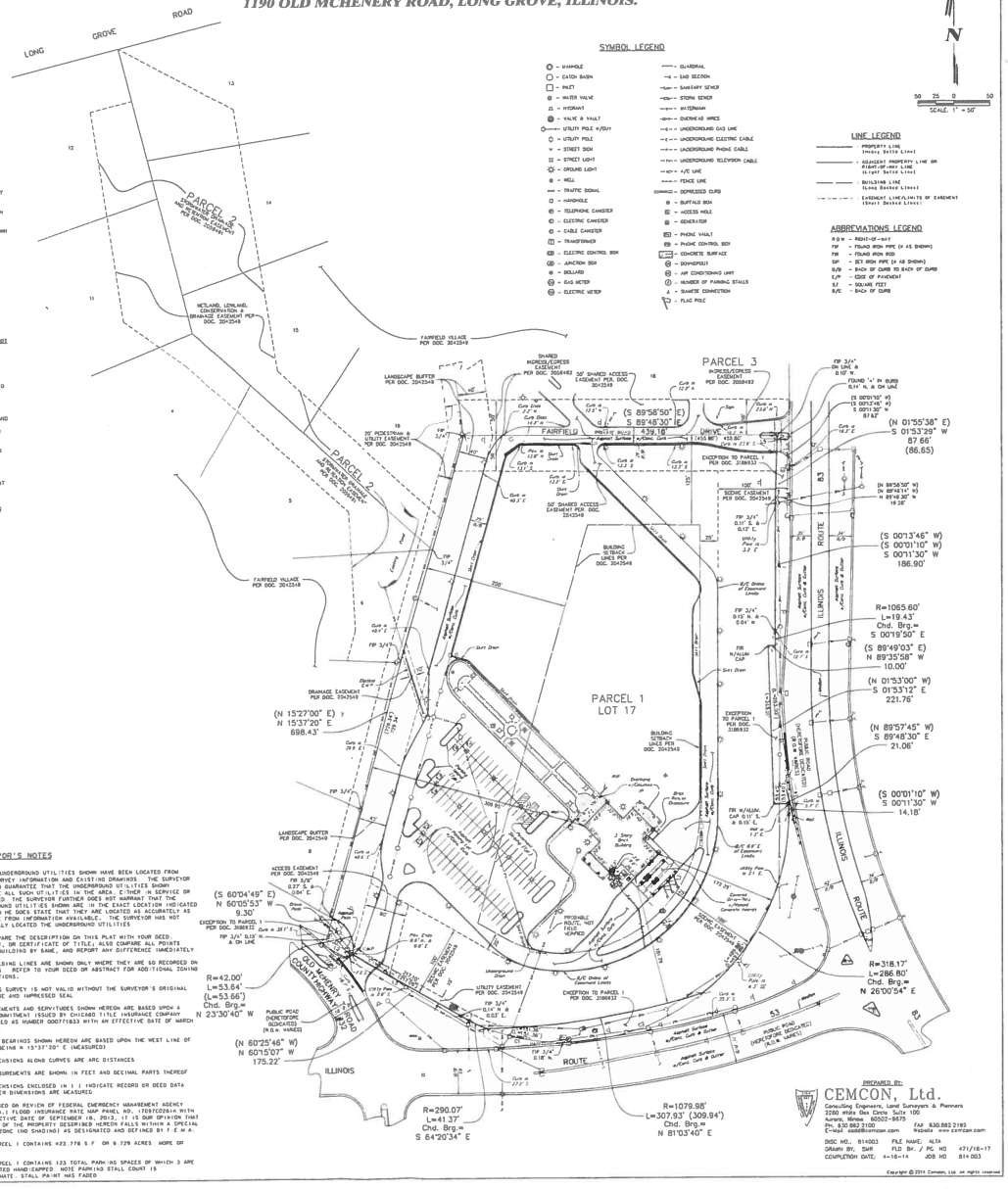


### SYMBOL LEGEND

- MANHOLE
- CATCH BASIN
- INLET
- WATER VALVE
- HYDRANT
- VALVE IN VAULT
- UTILITY POLE W/GUY
- UTILITY POLE
- STREET SIGN
- STREET LIGHT
- GROUND LIGHT
- WELL
- TRAFFIC SIGNAL
- HANDHOLE
- TELEPHONE CANISTER
- ELECTRIC CANISTER
- CABLE CANISTER
- TRANSFORMER
- ELECTRIC CONTROL BOX
- JUNCTION BOX
- BOLLARD
- GAS METER
- ELECTRIC METER
- GUARDRAIL
- LAND SECTION
- SANITARY SEWER
- STORM SEWER
- WATERMAIN
- OVERHEAD WIRES
- UNDERGROUND GAS LINE
- UNDERGROUND ELECTRIC CABLE
- UNDERGROUND PHONE CABLE
- UNDERGROUND TELEVISION CABLE
- A/C LINE
- FENCE LINE
- DEPRESSED CURB
- BUFFALO BOX
- ACCESS HOLE
- GENERATOR
- PHONE VAULT
- PHONE CONTROL BOX
- CONCRETE SURFACE
- DOWNSPOUT
- AIR CONDITIONING UNIT
- NUMBER OF PARKING STALLS
- SUMMITE CONNECTION
- FLAG POLE

### LINE LEGEND

- PROPERTY LINE (Heavy Solid Line)
- ADJACENT PROPERTY LINE OR RIGHT-OF-WAY LINE (Light Solid Line)
- BUILDING LINE (Long Dashed Lines)
- EASEMENT LINE/LIMITS OF EASEMENT (Short Dashed Lines)

### ABBREVIATIONS LEGEND

ROW – RIGHT-OF-WAY
FIP – FOUND IRON PIPE (# AS SHOWN)
FIR – FOUND IRON ROD
SIP – SET IRON PIPE (# AS SHOWN)
B/B – BACK OF CURB TO BACK OF CURB
E/P – EDGE OF PAVEMENT
S.F. – SQUARE FEET
B/C – BACK OF CURB

### CURVE TABLE

| | RECORD | MEASURED |
|---|---|---|
| C1 | R=290.07' L=109.99' | R=290.07' L=109.99' |
| C2 | R=318.17' L=211.06' | R=290.07' L=211.06' |
| C3 | R=1065.60' L=183.36' | R=1065.60' L=183.58' |

### LINE TABLE

| | RECORD | MEASURED |
|---|---|---|
| L1 | N 15°58'24" E, 30.91' | N 15°37'20" E, 30.91' |
| L2 | N 60°13'02" W, 41.88' | N 60°13'07" W, 41.88' |
| L3 | S 60°13'02" E, 217.08' | S 60°13'07" E, 217.10' |
| L4 | S 00°02'15" E, 39.22' | S 00°11'30" E, 39.22' |
| L5 | S 89°47'28" E, 16.68' | S 89°48'30" E, 16.68' |

## NOTES ON SCHEDULE B SURVEY RELATED TITLE EXCEPTIONS

J. SCENIC EASEMENT AS SHOWN ON THE PLAT OF SAID SUBDIVISION; PLOTTED.

K. I.D. EASEMENT AS SHOWN ON THE PLAT OF SUBDIVISION RECORDED AS DOCUMENT 2042549. PLOTTED.

L. SHARED ACCESS EASEMENT OVER THE NORTH 50 FEET OF LOT 17 AND THE SOUTH 50 FEET OF LOT 18 AS SHOWN ON THE PLAT OF SAID SUBDIVISION. PLOTTED.

M. LANDSCAPE BUFFER OVER THE WESTERLY 40 FEET OF LOTS 17 AND 18, AS SHOWN ON THE PLAT OF SAID SUBDIVISION. PLOTTED.

N. SIXTY FOOT ACCESS EASEMENT OVER THE SOUTHWESTERLY PORTION OF LOT 17, AS SHOWN ON THE PLAT OF SUBDIVISION. PLOTTED.

O. TEN FOOT DRAINAGE EASEMENT AS SHOWN ON THE PLAT OF SAID SUBDIVISION; PLOTTED.

P. BUILDING LINE 200 FEET SOUTHEASTERLY OF THE NORTHWESTERLY LINE, 125 FEET WESTERLY OF THE EASTERLY LINE, 125 FEET SOUTHERLY OF THE NORTHERLY LINE AND OVER THE SOUTHEASTERLY PORTION OF SAID LOT AS SHOWN ON THE PLAT OF SAID SUBDIVISION. PLOTTED.

Q. LETTER FROM THE ILLINOIS DEPARTMENT OF TRANSPORTATION RECORDED WITH THE SUBDIVISION AS DOCUMENT 2042549 STATING THE FOLLOWING: "BASED UPON DATA AVAILABLE TO THE DEPARTMENT, IT HAS BEEN DETERMINED THAT THE SUBDIVISION IS NOT SUBJECT TO FLOOD RISK."; PARTICULARS OF DOCUMENT DO NOT PLOT.

R. GRANT AND DECLARATION OF RECIPROCAL EASEMENTS RECORDED AS DOCUMENT 2058482 FOR INGRESS AND EGRESS AND THE CONDITIONS, COVENANTS AND AGREEMENTS THEREIN CONTAINED. EASEMENT PLOTTED.

S. (A) PROPERTY SUBJECT TO TERMS, PROVISIONS, AND CONDITIONS RELATING TO THE EASEMENT DESCRIBED AS PARCEL 2 AND 3 CONTAINED IN THE INSTRUMENT CREATING SAID EASEMENT; EASEMENT PLOTTED.

U. THE SURVEY PREPARED BY GREWLEY & BIEDERMANN, INC., NUMBER 2006.0274B.001, DATED FEBRUARY 9, 2005, RECERTIFIED DECEMBER 13, 2005, AND LAST DATED FEBRUARY 17, 2006 ORDER NUMBER 2006.0334B, SHOWS STORM CATCH BASINS, WATER FIRE HYDRANT, ELECTRIC UTILITY POLES AND AERIAL WIRES OVER AND ACROSS THE LAND. VISIBLE UTILITY APPURTENANCES SHOWN.

W. PROPERTY SUBJECT TO A VILLAGE OF LONG GROVE SPECIAL SERVICE AREA PER ORDINANCE RECORDED AS DOCUMENT 6364987; PARTICULARS OF DOCUMENT DO NOT PLOT.

AA. PROPERTY SUBJECT TO TERMS AND PROVISIONS CONTAINED IN ORDINANCES REGARDING REDEVELOPMENT BY THE VILLAGE OF LONG GROVE RECORDED AS DOCUMENT 6399119, 6399120 AND 6399121; PARTICULARS OF DOCUMENT DO NOT PLOT.

AB. PROPERTY SUBJECT TO TERMS AND PROVISIONS CONTAINED IN THE REDEVELOPMENT AGREEMENT RECORDED AS DOCUMENT NUMBER 6503728; PARTICULARS OF DOCUMENT DO NOT PLOT.

## LEGAL DESCRIPTION

PARCEL 1:

LOT 17 IN FAIRFIELD VILLAGE (EXCEPT THOSE PARTS TAKEN FOR ROAD BY INSTRUMENT RECORDED AS DOCUMENT 3186320), BEING A SUBDIVISION IN THE EAST 1/2 OF THE NORTHWEST 1/4 AND THE WEST 1/2 OF THE NORTHEAST 1/4 OF SECTION 30, TOWNSHIP 43 NORTH, RANGE 11, EAST OF THE THIRD PRINCIPAL MERIDIAN, ACCORDING TO THE PLAT THEREOF RECORDED JANUARY 4, 1980 AS DOCUMENT 2042549 AND CORRECTED BY CERTIFICATE OF CORRECTION RECORDED APRIL 7, 1980 AS DOCUMENT 2033570, IN LAKE COUNTY, ILLINOIS

PARCEL 2:

EASEMENT FOR STORM WATER DRAINAGE AND RETENTION OF STORM WATER FOR THE BENEFIT OF PARCEL 1 AS CREATED IN A RETENTION FACILITY BY GRANT OF EASEMENT DATED JANUARY 29, 1980 AND RECORDED MARCH 3, 1980 AS DOCUMENT 2039841, OVER THAT PART OF LOTS 4, 5, 6, 7, 8, 9, 10, 11, 12 AND 16 OF FAIRFIELD VILLAGE SUBDIVISION CROSS HATCHED ON EXHIBIT "A" ATTACHED TO DOCUMENT 2039851

PARCEL 3:

EASEMENT FOR INGRESS AND EGRESS FOR THE BENEFIT OF PARCEL 1 AS CREATED BY GRANT AND DECLARATION OF RECIPROCAL EASEMENTS DATED JANUARY 29, 1980 AND RECORDED MAY 5, 1980 AS DOCUMENT 2058482, OVER PART OF THE SOUTHEAST 50 FEET OF LOT 18 IN FAIRFIELD VILLAGE SUBDIVISION

## SURVEYOR'S NOTES

1. THE UNDERGROUND UTILITIES SHOWN HAVE BEEN LOCATED FROM FIELD SURVEY INFORMATION AND EXISTING DRAWINGS. THE SURVEYOR MAKES NO GUARANTEE THAT THE UNDERGROUND UTILITIES SHOWN COMPRISE ALL SUCH UTILITIES IN THE AREA, EITHER IN SERVICE OR ABANDONED. THE SURVEYOR FURTHER DOES NOT WARRANT THAT THE UNDERGROUND UTILITIES SHOWN ARE IN THE EXACT LOCATION INDICATED ALTHOUGH HE DOES STATE THAT THEY ARE LOCATED AS ACCURATELY AS POSSIBLE FROM INFORMATION AVAILABLE. THE SURVEYOR HAS NOT PHYSICALLY LOCATED THE UNDERGROUND UTILITIES

2. COMPARE THE DESCRIPTION ON THIS PLAT WITH YOUR DEED, ABSTRACT, OR CERTIFICATE OF TITLE; ALSO COMPARE ALL POINTS BEFORE BUILDING BY SAME, AND REPORT ANY DIFFERENCE IMMEDIATELY

3. BUILDING LINES ARE SHOWN ONLY WHERE THEY ARE SO RECORDED ON THE MAPS. REFER TO YOUR DEED OR ABSTRACT FOR ADDITIONAL ZONING RESTRICTIONS.

4. THIS SURVEY IS NOT VALID WITHOUT THE SURVEYOR'S ORIGINAL SIGNATURE AND IMPRESSED SEAL

5. EASEMENTS AND SERVITUDES SHOWN HEREON ARE BASED UPON A TITLE COMMITMENT ISSUED BY CHICAGO TITLE INSURANCE COMPANY IDENTIFIED AS NUMBER 0007701833 WITH AN EFFECTIVE DATE OF MARCH 11, 2014

6. THE BEARINGS SHOWN HEREON ARE BASED UPON THE WEST LINE OF LOT 17 BEING N 15°37'20" E (MEASURED)

7. DIMENSIONS ALONG CURVES ARE ARC DISTANCES

8. MEASUREMENTS ARE SHOWN IN FEET AND DECIMAL PARTS THEREOF

9. DIMENSIONS ENCLOSED IN ( ) INDICATE RECORD OR DEED DATA ALL OTHER DIMENSIONS ARE MEASURED

10. BASED ON REVIEW OF FEDERAL EMERGENCY MANAGEMENT AGENCY (F.E.M.A.) FLOOD INSURANCE RATE MAP PANEL NO. 17097C0291H WITH AN EFFECTIVE DATE OF SEPTEMBER 18, 2012, IT IS OUR OPINION THAT NO PART OF THE PROPERTY DESCRIBED HEREON FALLS WITHIN A SPECIAL HAZARD ZONE (NO SHADING) AS DESIGNATED AND DEFINED BY F.E.M.A.

11. PARCEL 1 CONTAINS 423,778 S.F. OR 9.729 ACRES, MORE OR LESS

12. PARCEL 1 CONTAINS 133 TOTAL PARKING SPACES OF WHICH 3 ARE DESIGNATED HANDICAPPED. NOTE PARKING STALL COUNT IS APPROXIMATE. STALL PAINT HAS FADED

## SURVEYOR'S CERTIFICATE

TO: CHICAGO TITLE INSURANCE COMPANY
HARBOR RETIREMENT ASSOCIATES, LLC

THIS IS TO CERTIFY THAT THIS MAP OR PLAT AND THE SURVEY ON WHICH IT IS BASED WERE MADE IN ACCORDANCE WITH THE 2011 MINIMUM STANDARD DETAIL REQUIREMENTS FOR ALTA/NSPS LAND TITLE SURVEYS, JOINTLY ESTABLISHED AND ADOPTED BY ALTA AND NSPS, AND INCLUDES ITEMS 2, 3, 4, 6, 7(a), 7(b1), 7(c), 8, 9, 10(a) AND 11(a) OF TABLE A THEREOF. THE FIELD WORK WAS COMPLETED ON MARCH 24, 2014.

DATE OF PLAT OR MAP: APRIL 17, 2014

PETER A. BLAESER
ILLINOIS PROFESSIONAL LAND SURVEYOR NO. 3072
MY REGISTRATION EXPIRES ON NOVEMBER 30, 2014
PROFESSIONAL DESIGN FIRM LICENSE NUMBER 184-002937
EXPIRES APRIL 30, 2014


PREPARED BY:
CEMCON, Ltd.
Consulting Engineers, Land Surveyors & Planners
2280 White Oak Circle Suite 100
Aurora, Illinois 60502-9675
Ph. 630.882.2100 FAX 630.882.2183
E-Mail: cadd@cemcon.com Website: www.cemcon.com


JOB NO.: 814003 FILE NAME: ALTA
DRAWN BY: SMR FLD BK / PG NO 471/16-17
COMPLETION DATE: 4-16-14 JOB NO 814.003

Copyright © 2014 Cemcon, Ltd. All rights reserved

# PRELIMINARY ENGINEERING PLAN
FOR
# HARBORCHASE
# of
# LONG GROVE, ILLINOIS

## LOCATION MAP

### LEGAL DESCRIPTION

LOT 17 IN FAIRFIELD VILLAGE (EXCEPT THOSE PARTS TAKEN FOR ROAD BY INSTRUMENT RECORDED AS DOCUMENT 3186932), BEING A SUBDIVISION IN THE EAST 1/2 OF THE NORTHWEST 1/4 AND THE WEST 1/2 OF THE NORTHEAST 1/4 OF SECTION 30, TOWNSHIP 43 NORTH, RANGE 11, EAST OF THE THIRD PRINCIPAL MERIDIAN, ACCORDING TO THE PLAT THEREOF RECORDED JANUARY 4, 1980 AS DOCUMENT 2042549 AND CORRECTED BY CERTIFICATE OF CORRECTION RECORDED APRIL 7, 1980 AS DOCUMENT 2055570, IN LAKE COUNTY, ILLINOIS.

N

SCALE: 1 INCH = 50 FEET

TEMPORARY CELL TOWER (TO REMAIN IN PLACE UNTIL 03/2015)

VILLAGE OF LONG GROVE R2 PUD ZONING

S 89°48'30" E 439.18'

S 01°53'29" W 87.66'

CONNECT TO EXISTING WATERMAIN

6" PERFORATED UNDERDRAIN @ 1.0%

S 00°11'30" W 186.90'

ASSUMED LOCATION OF 10" WATERMAIN PER DISCUSSIONS WITH VILLAGE. ACTUAL LOCATION TO BE VERIFIED DURING FINAL DESIGN.

R=1065.60' L=19.43' Chd. Brg.= S 00°19'50" E

VILLAGE OF LONG GROVE R2 PUD ZONING

N 89°35'58" W 10.00'

CONNECT UNDERDRAIN TO EXISTING CATCH BASIN

N 15°37'20" E 698.43'

S 01°53'12" E 221.76'

CONNECT TO EXISTING WATERMAIN

NATURALIZED BIO SWALE

CAP AND ABANDON EXISTING WELL

6" PERFORATED UNDERDRAIN @ 1.0%

S 89°48'30" E 21.06'

S 00°11'30" W 14.18'

CONNECT TO EXISTING MANHOLE @ INV.= 715.0±

N 60°05'53" W 9.30'

R=42.00' L=53.64' Chd. Brg.= N 23°30'40" W

VILLAGE OF LONG GROVE R3 ZONING

N 60°15'07" W 175.22'

R=318.17' L=286.80' Chd. Brg.= N 26°00'54" E

R=290.07' L=41.37' Chd. Brg.= S 64°20'34" E

R=1079.98' L=307.93' Chd. Brg.= N 81°03'40" E

VILLAGE OF LONG GROVE O & R ZONING

VILLAGE OF BUFFALO GROVE R 9A SPECIAL USE ZONING

CONNECT TO EXISTING WATERMAIN AT STUB

ILLINOIS ROUTE 53

OLD MILWAUKEE ROAD

F/F=728.3

3 STORY 123,600 S.F. ASSISTED LIVING/MEMORY CARE/REST FACILITY

COURTYARD

LOADING ZONE

DIAMESE CONNECTION

20' TRANSITION TO REVERSE CROWN

## LEGEND

| EXISTING | PROPOSED | DESCRIPTION |
|---|---|---|
| | | MANHOLE |
| | | CATCH BASIN |
| | | INLET |
| | | CLEANOUT |
| | | SLOPE INLET BOX |
| | | HEADWALL |
| | | END SECTION |
| | | STORM SEWER |
| | | SANITARY SEWER |
| | | WATERMAIN |
| | | VALVE & BOX |
| | | WATER VALVE IN VAULT |
| | | FIRE HYDRANT |
| (R.74) | ELEV | CONTOURS ELEVATIONS |
| | | STREET LIGHT |
| | | OVERFLOW ROUTE |
| | | DIAMESE CONNECTION |
| | | GREASE TRAP |
| | | REVERSED PITCH GUTTER FLAG |
| | | DEPRESSED CURB & GUTTER |
| | | ADA RAMP |
| | | CELL TOWER |

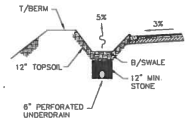


BIO SWALE (with Native Plantings)
(N.T.S.)

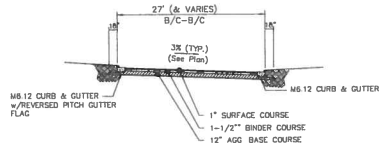


TYPICAL PAVEMENT SECTION
(N.T.S.)

NOTE: ALL WATERMAIN TO BE 8" UNLESS OTHERWISE INDICATED

PREPARED FOR:
HARBOR RETIREMENT ASSOCIATES
1440 HIGHWAY A1A
VERO BEACH, FL 32963

PREPARED BY:
CEMCON, Ltd.
Consulting Engineers, Land Surveyors & Planners
2280 White Oak Circle, Suite 100
Aurora, Illinois 60502-9675
PH: 630.862.2100 FAX: 630.862.2199
E-Mail: cadd@cemcon.com Website: www.cemcon.com

DISC NO.: 814003 FILE NAME: PREOVR
DRAWN BY: LAL FLD. BK. / PG. NO.: BK./PG.
COMPLETION DATE: 05-02-14 JOB NO.: 814.003
XREF : TOPO PROJECT MANAGER : KMM

PREENG

Copyright © 2014 Cemcon, Ltd. All rights reserved

PLOT FILE CREATED 5/2/2014 BY: LEGAL LAURENS DRAWING PATH: P:\814003\DWG\DRAWINGS\PRELIMINARY\PREOVR.DWG

# PRELIMINARY P.U.D.
## FOR
# HARBORCHASE
# of
# LONG GROVE, ILLINOIS

LOCATION MAP

### LEGAL DESCRIPTION

LOT 17 IN FAIRFIELD VILLAGE (EXCEPT THOSE PARTS TAKEN FOR ROAD BY INSTRUMENT RECORDED AS DOCUMENT 3186932), BEING A SUBDIVISION IN THE EAST 1/2 OF THE NORTHWEST 1/4 AND THE WEST 1/2 OF THE NORTHEAST 1/4 OF SECTION 30, TOWNSHIP 43 NORTH, RANGE 11, EAST OF THE THIRD PRINCIPAL MERIDIAN, ACCORDING TO THE PLAT THEREOF RECORDED JANUARY 4, 1980 AS DOCUMENT 2042549 AND CORRECTED BY CERTIFICATE OF CORRECTION RECORDED APRIL 7, 1980 AS DOCUMENT 2055570, IN LAKE COUNTY, ILLINOIS.

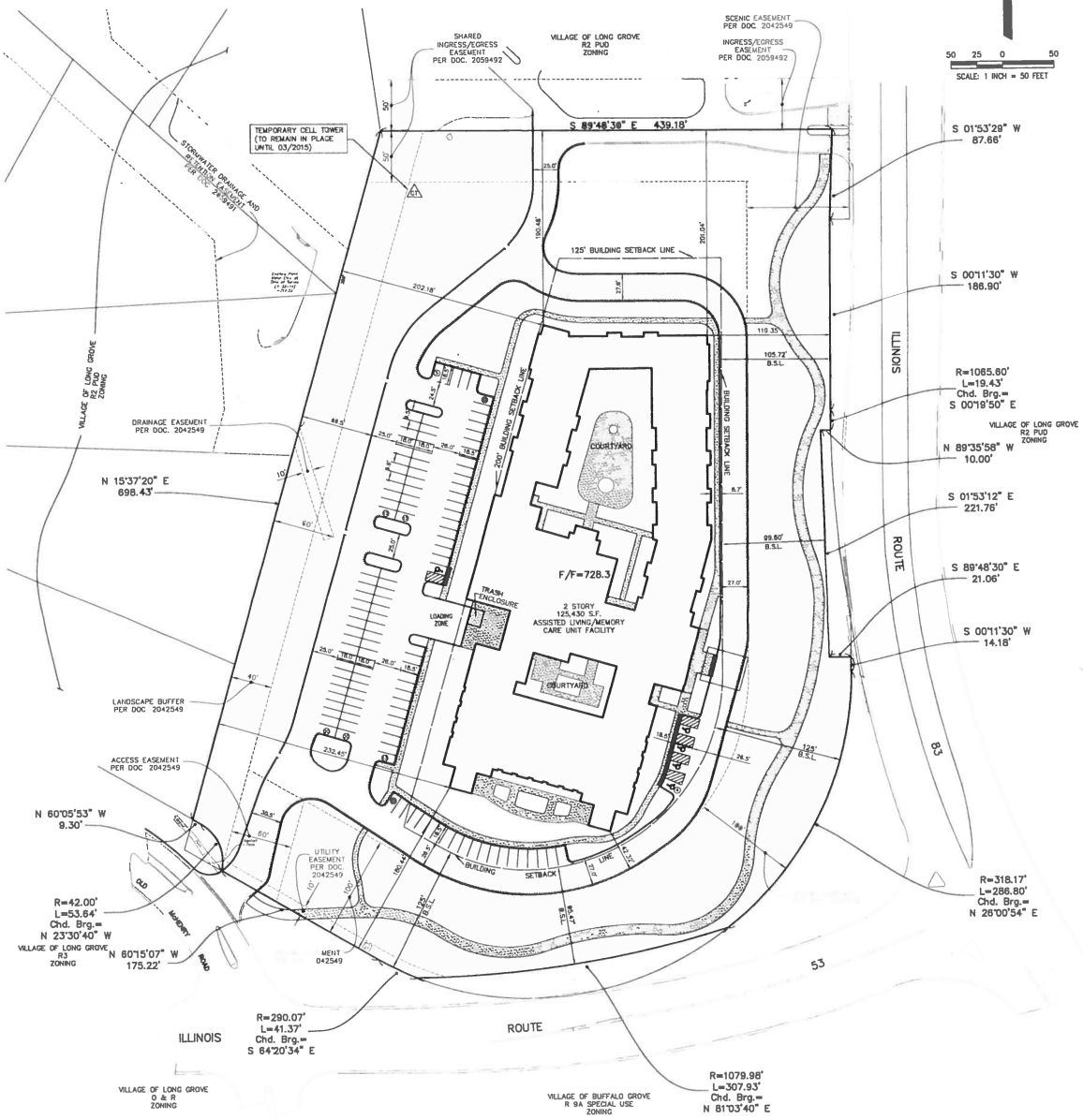


### NOTES

ALL MEASUREMENTS ARE SHOWN IN FEET AND DECIMAL PARTS OF A FOOT.

DIMENSIONS SHOWN ALONG CURVED LINES ARE ARC DISTANCES.

THE BEARINGS SHOWN HEREON ARE BASED ON THE WEST LINE OF LOT 17 BEING N 15°37'20" E (MEASURED).

CURB DIMENSIONS ARE SHOWN TO BACK OF CURB

### LINE LEGEND

- SUBDIVISION BOUNDARY LINE (Heavy Solid Line)
- ADJACENT LOT LINE/PROPERTY LINE (Solid Line)
- BUILDING LINE (Long Dashed Lines)
- EASEMENT LINE/LIMITS OF EASEMENT (Short Dashed Lines)

### SITE DATA

| | | |
|---|---|---|
| A. TOTAL SITE | 9.73 AC. | 100.00% |
| B. PROPOSED ZONING | R2-PUD | |
| C. BUILDING S.F. | 125,430 S.F. | |
| 1. ASSISTED LIVING UNITS | 80 | |
| 2. MEMORY CARE UNITS | 58 | |
| 3. TOTAL BEDS | 150 | |
| D. F.A.R. | 0.296 | |
| E. BUILDING LOT COVERAGE | 68,492 S.F. | 16.16% |
| F. BUILDING HEIGHT | 42 FT. | |
| G. OPEN SPACE (SCENIC EASEMENT, COMMON AREAS, COURTYARDS, ETC.) | 6.04 Ac. | 62.10% |
| H. IMPERVIOUS AREA | 193,283 S.F. | 45.63% |
| I. NO. OF PARKING SPACES PROVIDED | 126 | |
| J. NO. OF ADA PARKING SPACES REQUIRED | 5 | |
| K. NO. OF ADA PARKING SPACES PROVIDED | 5 | |

PREPARED FOR:
HARBOR RETIREMENT ASSOCIATES
1440 HIGHWAY A1A
VERO BEACH, FL 32963

PREPARED BY:
CEMCON, Ltd.
Consulting Engineers, Land Surveyors & Planners
2280 White Oak Circle, Suite 100
Aurora, Illinois 60502-9675
PH: 630.862.2100 FAX: 630.862.2199
E-Mail: cadd@cemcon.com Website: www.cemcon.com

DISC NO.: 814003 FILE NAME: PREOVR
DRAWN BY: LAL FLD. BK. / PG. NO.: BK./PG.
COMPLETION DATE: 05-02-14 JOB NO.: 814.003
XREF : TOPO PROJECT MANAGER : KMM

P.U.D.

Copyright © 2014 Cemcon, Ltd. All rights reserved.

1 . FACE BRICK
2 . FIBER CEMENT BOARD SIDING
3 . ASPHALT SHINGLES
4 . VINYL CASEMENT WINDOWS WITH ARCHITECTURAL MUNTINS
5 . PRE-FINISHED ALUMINUM GUTTER AND DOWN SPOUT
6 . PRECAST DECORATIVE BANDING
7 . PAINTED FIBER GLASS COLUMN
8 . PAINTED WOOD COLUMN & BALCONY EDGE
9 . PRE-FINISHED METAL RAILING
10 . PRE-FINISHED METAL STANDING SEAM ROOF.
11 . DECORATIVE STONE
12 . PRE-FINISHED ALUMINUM STORE FRONT AND DOORS

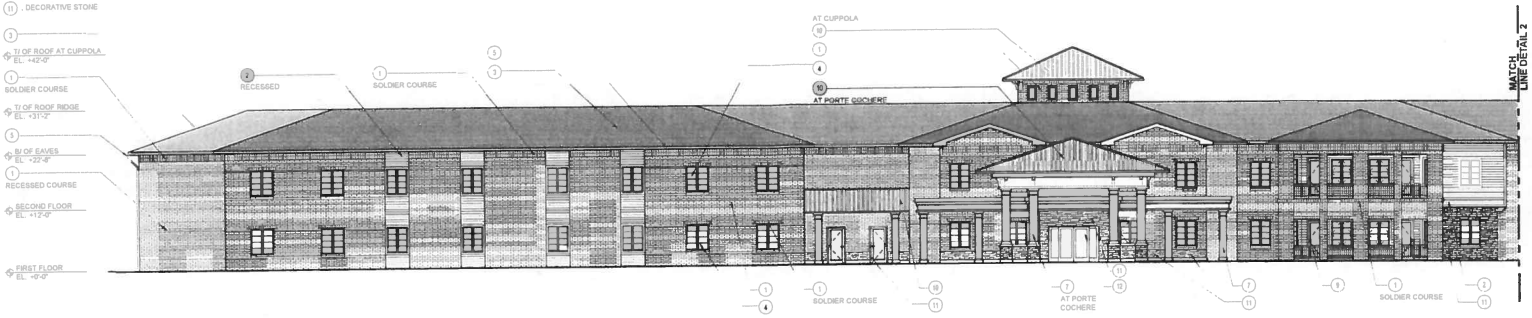


## 3 EAST ELEVATION

SCALE: 3/32"=1'-0"

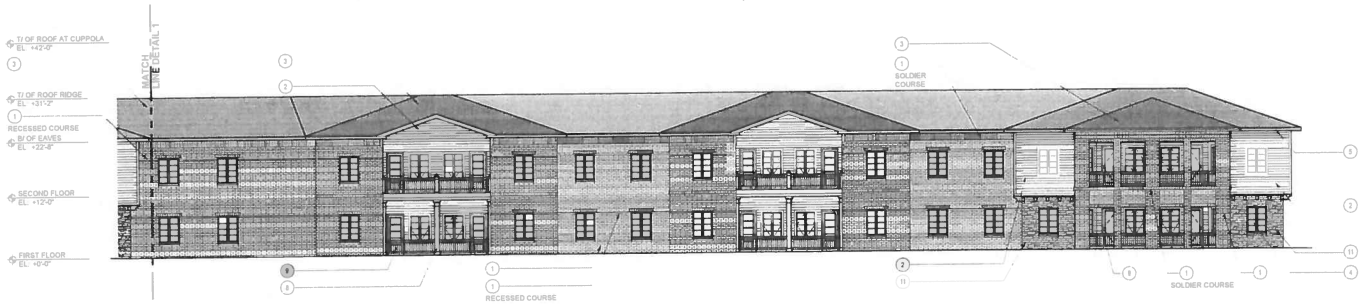


## 2 EAST ELEVATION

SCALE: 3/32"=1'-0"

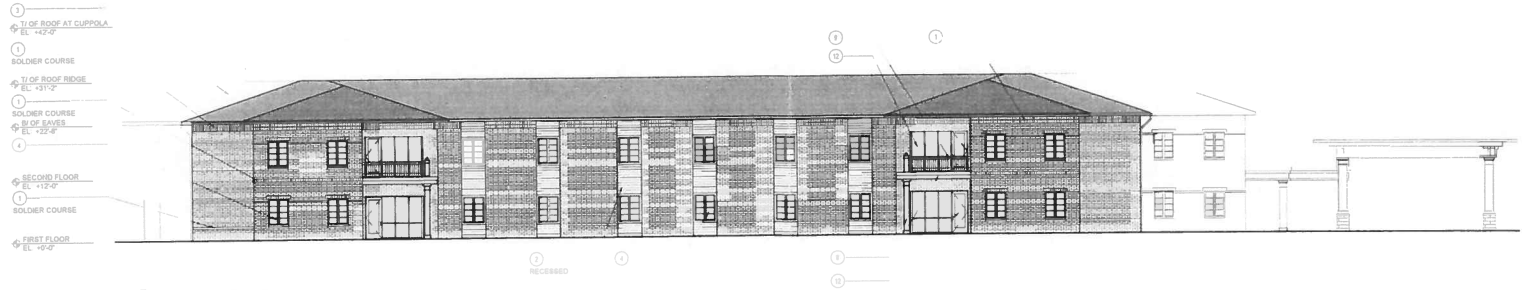


## 1 SOUTH ELEVATION

SCALE: 3/32"=1'-0"


Solomon Cordwell Buenz
www.scb.com
Chicago
312.896.1100
San Francisco
415.216.2450
Architecture Planning Interior Design


| NO. | DATE | DESCRIPTION |
|---|---|---|
| | 05.02.2014 | ISSUE FOR ZONING BOARD APPROVAL |

**HarborChase of Long Grove**
Senior Living Community

Long Grove, Illinois

© 2014 Solomon Cordwell Buenz

# BUILDING ELEVATIONS

Drawn By:

Checked By: PM/PD/PA (edit this)

Project Number: 2013039

Sheet Number: A3.01

1. FACE BRICK
2. FIBER CEMENT BOARD SIDING
3. ASPHALT SHINGLES
4. VINYL CASEMENT WINDOWS WITH ARCHITECTURAL MUNTINS
5. PRE-FINISHED ALUMINUM GUTTER AND DOWN SPOUT
6. PRECAST DECORATIVE BANDING
7. PAINTED FIBER GLASS COLUMN
8. PAINTED WOOD COLUMN & BALCONY EDGE
9. PRE-FINISHED METAL RAILING
10. PRE-FINISHED METAL STANDING SEAM ROOF.
11. DECORATIVE STONE
12. PRE-FINISHED ALUMINUM STORE FRONT AND DOORS

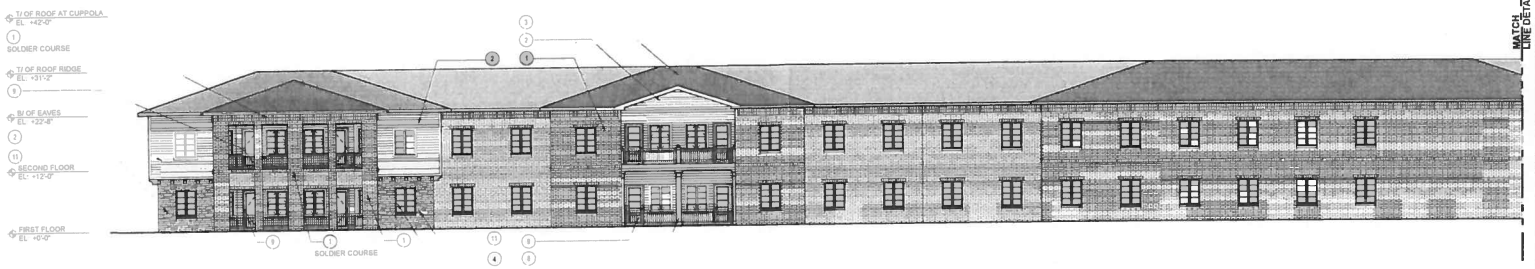


**3 WEST ELEVATION**
SCALE: 3/32"=1'-0"

**2 WEST ELEVATION**
SCALE: 3/32"=1'-0"

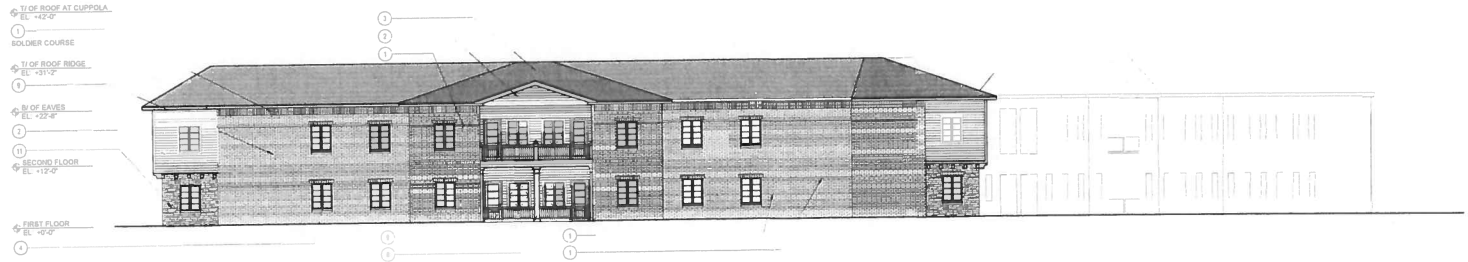


**1 NORTH ELEVATION**
SCALE: 3/32"=1'-0"


Solomon Cordwell Buenz
www.scb.com
Chicago
312.896.1100
San Francisco
415.216.2450
Architecture Planning Interior Design


| NO. | DATE | DESCRIPTION |
|---|---|---|
| | 05.02.2014 | ISSUE FOR ZONING BOARD APPROVAL |

**HarborChase of Long Grove**
Senior Living Community

Long Grove, Illinois

© 2014 Solomon Cordwell Buenz

**BUILDING ELEVATIONS**

Drawn By:
Checked By: PM/PD/PA (edit this)
Project Number: 2013039
Sheet Number: A3.02

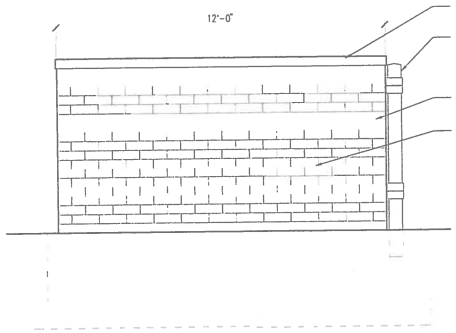


## 4 TRASH ENCLOSURE SIDE ELEVATION

SCALE 1/2"=1'-0"

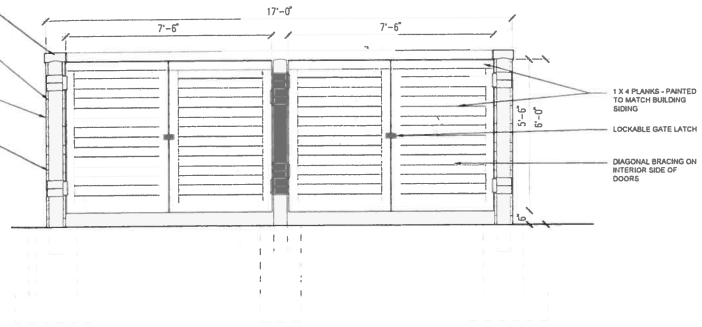


## 2 TRASH ENCLOSURE FRONT ELEVATION

SCALE 1/2"=1'-0"

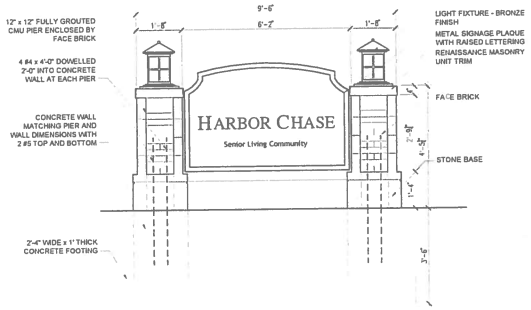


## 3 MONUMENTAL SIGN

SCALE 1/2"=1'-0"

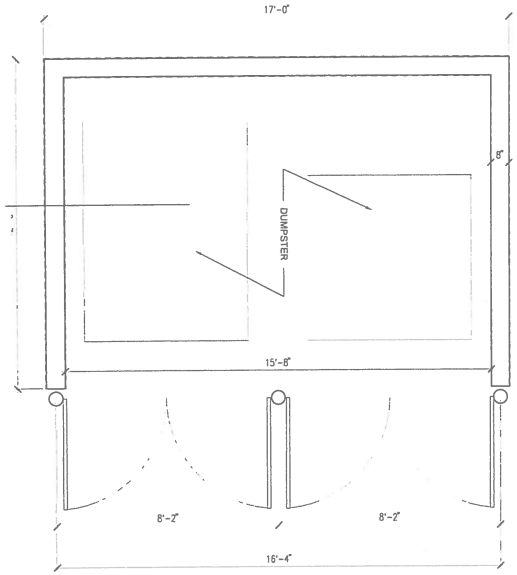


## 1 TRASH ENCLOSURE PLAN

SCALE 1/2"=1'-0"


Solomon Cordwell Buenz
www.scb.com
Chicago
312.896.1100
San Francisco
415.216.2450
Architecture Planning Interior Design


| NO. | DATE | DESCRIPTION |
|---|---|---|
| | 06.03.2014 | ISSUE FOR ZONING BOARD APPROVAL |

**HarborChase of Long Grove**
Senior Living Community

Long Grove, Illinois

© 2014 Solomon Cordwell Buenz

# SITE DETAILS SIGNAGE & TRASH ENCLOSURE

Drawn By:

Checked By: PM/PD/PA (edit this)

Project Number: 2013039

Sheet Number: A1.02

KIM LIGHTING

# CC/CCS21

## 21″ Arm Mounted, Curvilinear, LED

revision 8/27/12 • kim_cc21aled_spec.pdf

**Type:**
**Job:**
**Catalog number:**

/ / / /

Mtg. Fixture Electrical Module Finish Options

See page 2 — See page 2 — See pages 3-4

Select pole from Kim Arms and Poles Selection Guide. If pole is provided by others indicate O.D. for arm fitting.

**Approvals:**

**Date:**



# Specifications

21″ Diameter
120 Light Emitting Diodes
Total Max System Watts = 129W

**CC**

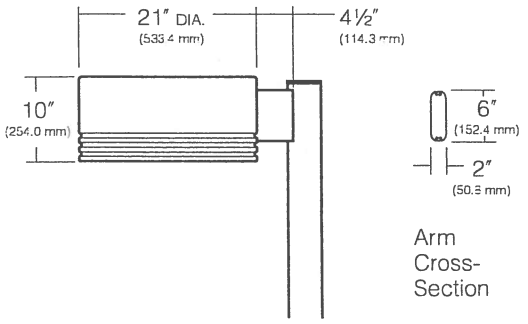


Arm Cross-Section

**CCS**

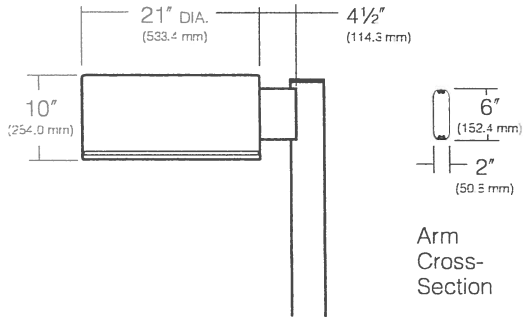


Arm Cross-Section

**Housing:** Spun aluminum. (Rollformed linear reveals; **CC:** Three equally spaced reveals, ½″ wide, separated by ½″ ribs, ¼″ deep. **CCS:** One ¼″ groove, ¼″ deep.) Sidewalls have a maximum 1° of taper, and are free of welds or fasteners. A rollformed aluminum flange is hemmed into the bottom providing support for the reflector module. An internal aluminum casting provides for mounting of the electrical module plus reinforcing for side-arm mounting of the fixture.

**Lens Frame Assembly:** One-piece cast aluminum lens frame is attached to the housing by a zinc plated cold rolled steel hinge with a stainless steel pin. Closure is by three self-retained stainless steel screws. A stainless steel self-locking stop arm is provided to hold the lens frame in the open position while servicing. A 3⁄16″ thick clear flat tempered glass lens is fully gasketed by a one-piece extruded and vulcanized silicone gasket. Lens is retained in the frame by removable zinc plated steel clips.

**Standard Arm Mounting:** Arm is one-piece extruded aluminum with internal bolt guides and fully radiussed top and bottom. Luminaire-to-pole attachment is by internal draw bolts, and includes a pole reinforcing plate with wire strain relief. Arm is circular cut to mate with specified round pole.

**Electronic Module:** All electrical components are UL and CSA recognized, mounted on a single plate and factory prewired with quick-disconnect plugs. Module includes a driver, LifeShield™ temperature control device and surge protector. Electrical module attaches to housing with key hole slots, accessible by opening the lens frame and removing optical module. Driver is rated for -40°F starting and has a 0-10V dimming interface for multi-level illumination options.

**Optical Module:** Precision, replaceable MicroEmitter® reflectors are positioned to achieve directional control toward desired task. The entire EmitterDeck® mounting assembly fastens to the housing as a one-piece module.

**Finish/Color:** TGIC thermoset polyester powder coat paint, 2.5 mil nominal thickness. Standard colors are Black, Dark Bronze, Light Gray, Stealth Gray™, Platinum Silver, or White. Custom colors are available.

**Warranty:** Kim Lighting warrants Curvilinear LED products ("Product(s)") sold by Kim Lighting to be free from defects in material and workmanship for (i) a period of five (5) years for metal parts, (ii) a period of ten (10) years for exterior housing paint finish(s), (iii) a period of six (6) years for LED Light Engines (MicroEmitters) and, (iv) a period of five (5) years for LED power components (LED Driver, LifeShield® temperature control device, surge protector), from the date of sale of such goods to the buyer as specified in Kim Lighting shipment documents for each product.

**CAUTION:** Fixtures must be grounded in accordance with national, state and/or local electrical codes. Failute to do so may result in serious personal injury.

| Listings and Ratings |
|---|
| ETL[1] to UL Standard 8750 |

[1]Suitable for wet locations.

KIM LIGHTING RESERVES THE RIGHT TO CHANGE SPECIFICATIONS WITHOUT NOTICE.

HUBBELL
HUBBELL LIGHTING, INC.

© 2012 KIM LIGHTING INC. • P.O. BOX 60080, CITY OF INDUSTRY, CA 91716-0080 • TEL: 626/968-5666 • FAX: 626/369-2695

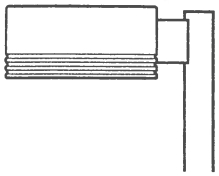

## Standard Features

### Mounting

**3Y** configuration is available for round poles only.

Plan View:

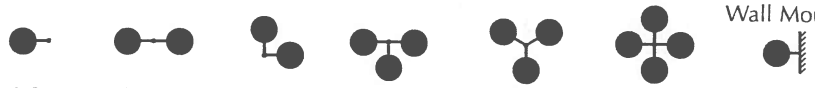

| | | | | | | | Wall Mount |
|---|---|---|---|---|---|---|---|
| EPA: | 1.2 | 2.4 | 2.2 | 3.4 | 3.4 | 3.9 | — |
| Cat. No.: | ☐ **1A** | ☐ **2B** | ☐ **2L** | ☐ **3T** | ☐ **3Y** | ☐ **4C** | ☐ **1W** |

### Fixture

Cat. No. designates **CC/CCS** fixture and light distribution.

CC 21 A x

**Housing:**
CC
CCS

**Size:**
21 = 21″ Large
120 LEDs

A = Arm Mount

**Distribution:**
- ☐ 1 = Type I Full Cutoff
- ☐ 2 = Type II Full Cutoff
- ☐ 3 = Type III Full Cutoff
- ☐ 4 = Type IV Full Cutoff
- ☐ 5 = Type V Square Full Cutoff
- ☐ L = Type L Left Full Cutoff
- ☐ R = Type R Right Full Cutoff

Light Distribution:

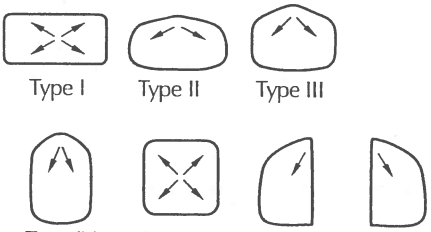

Type I | Type II | Type III | Type IV Forward Throw | Type V Square | Type R Right | Type L Left

### Electrical Module

**NOTE:** Curvilinear system employs Nichia's SSL product.
Part number: NS6x183
(NS6L183-H3,NS6W183-H3)

Cat. Nos. for Electrical Modules available:

120L xK x

**Source:**
120L = 120 LED's

**Color Temperature:**[1]
- ☐ 4K = 4000K
- ☐ 5K = 5000K
- ☐ 2K = 580nm - Amber

**Voltage:**
- ☐ 120 = 120V
- ☐ 208 = 208V
- ☐ 240 = 240V
- ☐ 277 = 277V
- ☐ 347 = 347V
- ☐ 480 = 480V

[1]3000K is also available on an "Engineered-to-Order" (ETO) basis.

### Finish

TGIC powder coat paint over a titanated zirconium conversion coating.

| Color: | Black | Dark Bronze | Light Gray | Stealth Gray® | Platinum Silver | White | Custom Color[1] |
|---|---|---|---|---|---|---|---|
| Cat. No.: | ☐ **BL** | ☐ **DB** | ☐ **LG** | ☐ **SG** | ☐ **PS** | ☐ **WH** | ☐ **CC** |

[1]Custom colors subject to additional charges, minimum quantities and extended lead times. Consult representative. Custom color description: _____

© 2012 KIM LIGHTING INC. • P.O. BOX 60080, CITY OF INDUSTRY, CA 91716-0080 • TEL: 626/968-5666 • FAX: 626/369-2695

**Type:**
**Job:**
**Catalog number:**

/ / / /

Mtg. Fixture Electrical Module Finish Options

See page 2 See pages 3-4

Select pole from Kim Arms and Poles Selection Guide. If pole is provided by others indicate O.D. for arm fitting.

**Approvals:**

**Date:**
**Page: 1 of 5**

## Specifications

17″ Diameter
60 Light Emitting Diodes
Total System Watts = 66W

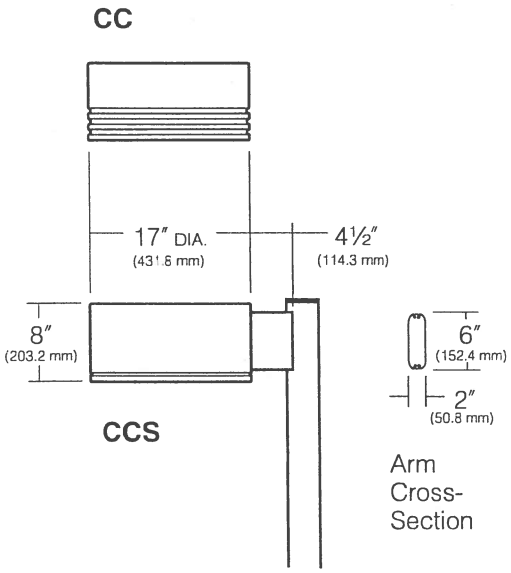


**Housing:** Spun aluminum. (Rollformed linear reveals; **CC:** Three equally spaced reveals, ½″ wide, separated by ½″ ribs, ¼″ deep. **CCS:** One ¼″ groove, ¼″ deep.) Sidewalls have a maximum 1° of taper, and are free of welds or fasteners. A rollformed aluminum flange is hemmed into the bottom providing support for the reflector module. An internal aluminum casting provides for mounting of the electrical module plus reinforcing for side-arm mounting of the fixture.

**Lens Frame Assembly:** One-piece cast aluminum lens frame is attached to the housing by a zinc plated cold rolled steel hinge with a stainless steel pin. Closure is by one self-retained stainless steel screw. A stainless steel self-locking stop arm is provided to hold the lens frame in the open position while servicing. A 3⁄16″ thick clear flat tempered glass lens is fully gasketed by a one-piece extruded and vulcanized silicone gasket. Lens is retained in the frame by removable zinc plated steel clips.

**Standard Arm Mounting:** Arm is one-piece extruded aluminum with internal bolt guides and fully radiussed top and bottom. Luminaire-to-pole attachment is by internal draw bolts, and includes a pole reinforcing plate with wire strain relief. Arm is circular cut to mate with specified round pole.

**Electronic Module:** All electrical components are UL and CSA recognized, mounted on a single plate and factory prewired with quick-disconnect plugs. Module includes a driver, LifeShield™ temperature control device and surge protector. Electrical module attaches to housing with key hole slots, accessible by opening the lens frame and removing optical module.. Driver is rated for -40°F starting and has a 0-10V dimming interface for multi-level illumination options.

**Optical Module:** Precision, replaceable MicroEmitter® reflectors are positioned to achieve directional control toward desired task. The entire EmitterDeck® mounting assembly fastens to the housing as a one-piece module.

**Finish/Color:** Finish is TGIC thermoset polyester powder coat paint, 2.5 mil nominal thickness. Standard colors are Black, Dark Bronze, Light Gray, Stealth Gray™, Platinum Silver, or White. Custom colors are available.

**Warranty:** Kim Lighting warrants Curvilinear LED products ("Product(s)") sold by Kim Lighting to be free from defects in material and workmanship for (i) a period of five (5) years for metal parts, (ii) a period of ten (10) years for exterior housing paint finish(s), (iii) a period of six (6) years for LED Light Engines (MicroEmitter® reflectors) and, (iv) a period of five (5) years for LED power components (LED Driver, LifeShield® temperature control device, surge protector), from the date of sale of such goods to the buyer as specified in Kim Lighting shipment documents for each product.

**CAUTION:** Fixtures must be grounded in accordance with national, state and/or local electrical codes. Failure to do so may result in serious injury.

| Listings and Ratings |
|---|
| ETL[1] to UL Standard 8750 |

[1]Suitable for wet locations.

KIM LIGHTING RESERVES THE RIGHT TO CHANGE SPECIFICATIONS WITHOUT NOTICE.

HUBBELL
HUBBELL LIGHTING INC

© 2012 KIM LIGHTING INC. • P.O. BOX 60080, CITY OF INDUSTRY, CA 91716-0080 • TEL: 626/968-5666 • FAX: 626/369-2695

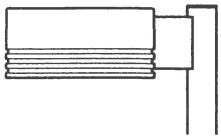

## Standard Features

### Mounting

**3Y** configuration is available for round poles only.

Plan View: Wall Mount

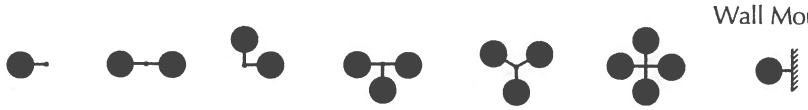

| | | | | | | | |
|---|---|---|---|---|---|---|---|
| EPA: | 0.9 | 1.8 | 1.6 | 2.5 | 2.5 | 2.8 | — |
| Cat. No.: | ☐ **1A** | ☐ **2B** | ☐ **2L** | ☐ **3T** | ☐ **3Y** | ☐ **4C** | ☐ **1W** |

### Fixture

Cat. No. designates **CC/CCS** fixture and light distribution.

x 17 A x

**Housing:**
- ☐ CC
- ☐ CCS

**Size:**
17 = 17″ Small
60 LEDs

A = Arm Mount

**Distribution:**
- ☐ 1 = Type I Full Cutoff
- ☐ 2 = Type II Full Cutoff
- ☐ 3 = Type III Full Cutoff
- ☐ 4 = Type IV Full Cutoff
- ☐ 5 = Type V Square Full Cutoff
- ☐ L = Type L Left Full Cutoff
- ☐ R = Type R Right Full Cutoff

Light Distribution:

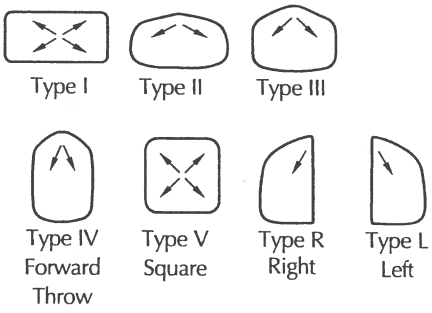


### Electrical Module

**NOTE:** Curvilinear system employs Nichia's SSL product.
Part number: NS6x183 (NS6L183-H3,NS6W183-H3)

Cat. Nos. for Electrical Modules available:

60 xK x

**Source:**
60 = 60 LED's

**Color Temperature:**[1]
- ☐ 4K = 4000K
- ☐ 5K = 5000K
- ☐ 2K = 580nm - Amber

**Voltage:**
- ☐ 120 = 120V
- ☐ 208 = 208V
- ☐ 240 = 240V
- ☐ 277 = 277V
- ☐ 347 = 347V[2]
- ☐ 480 = 480V[2]

[1]3000K is also available on an "Engineered-to-Order" (ETO) basis.
[2]Due to current unavailability of 347V and 480V drivers, specification of these voltages may feature an integral step-down transformer.

### Finish

TGIC powder coat paint over a titanated zirconium conversion coating.

| Color: | Black | Dark Bronze | Light Gray | Stealth Gray™ | Platinum Silver | White | Custom Color[4] |
|---|---|---|---|---|---|---|---|
| Cat. No.: | ☐ **BL** | ☐ **DB** | ☐ **LG** | ☐ **SG** | ☐ **PS** | ☐ **WH** | ☐ **CC** |

[4]Custom colors subject to additional charges, minimum quantities and extended lead times. Consult representative. Custom color description: _____

© 2012 KIM LIGHTING INC. • P.O. BOX 60080, CITY OF INDUSTRY, CA 91716-0080 • TEL: 626/968-5666 • FAX: 626/369-2695

ELECTRICAL PLAN - PHOTOMETRICS

SCALE 1"=40'-0"

ELECTRICAL

## LIGHTING FIXTURE SCHEDULE

| SYMBOL | FIXTURE INDOOR | FIXTURE FLOOR | FIXTURE LED | VOLTS | LAMPS # | LAMPS WATTS & TYPE | MOUNTING HEIGHT | DESCRIPTION & VARIATIONS | MANUFACTURER & CATALOG # OR APPROVED EQUAL | NOTES |
|---|---|---|---|---|---|---|---|---|---|---|
| A3 | | L | | 208 | 2 | 252W | 18' | 21" ARM MOUNTED, 18' POLE HEIGHT, LED, DOUBLE FIXTURE | KIM 2B-CC-21-A3-120L-4K-208 | |
| A | | | | 208 | 1 | 126W | 18' | [redacted] | KIM 1B-CC-21-A2-120L-4K-208 | |
| A3 | | | | 208 | 1 | 126W | 18' | 21" ARM MOUNTED, 18' POLE HEIGHT, LED, SINGLE FIXTURE | KIM 1B-CC-21-A3-120L-4K-208 | |
| | | L | | 208 | 1 | 66W | 12' | [redacted] | KIM 1A-CC-17-A2-E35-60-4K-208 | |
| D | | F | | MVOLT | | 26W | VARIES | 6" RECESSED OPEN REFLECTOR DOWNLIGHT | GOTHAM LIGHTING #AFV-26CTT-6WB-MVOLT-WL | |

## STATISTICS

| Description: | Symbol | Avg | Max | Min | Max/Min | Avg/Min |
|---|---|---|---|---|---|---|
| Parking | + | 2.0 fc | 8.0 fc | 0.5 fc | 12.0:1 | 4.0:1 |
| Property Line : East | + | 0.1 fc | 1.4 fc | 0.0 fc | N/A | N/A |
| Property Line : North | + | 1.1 fc | 3.5 fc | 0.0 fc | N/A | N/A |
| Property Line : South | + | 0.1 fc | 1.9 fc | 0.0 fc | N/A | N/A |
| Property Line : West | + | 0.0 fc | 0.3 fc | 0.0 fc | N/A | N/A |
| Site Overall | + | 0.8 fc | 7.4 fc | 0.0 fc | N/A | N/A |


Solomon Cordwell Buenz

www.scb.com

Chicago
312.896.1100

San Francisco
415.216.2450

Architecture Planning Interior Design


| NO. | DATE | DESCRIPTION |
|---|---|---|
| | 05.09.2014 | ISSUE FOR ZONING BOARD APPROVAL |

**HarborChase of Long Grove**

Senior Living Community

Long Grove, Illinois

© 2014 Solomon Cordwell Buenz

# SITE ELECTRICAL PLAN - PHOTOMETRICS

Drawn By: CML

Checked By: JLJ

Project Number: 2013039

Sheet Number: A1.02

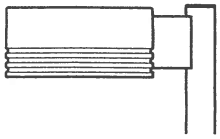

## Standard Features

### Mounting

**3Y** configuration is available for round poles only.

Plan View: Wall Mount

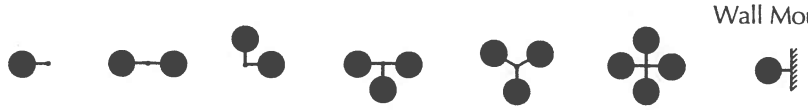

| | | | | | | | |
|---|---|---|---|---|---|---|---|
| EPA: | 0.9 | 1.8 | 1.6 | 2.5 | 2.5 | 2.8 | — |
| Cat. No.: | ☐ **1A** | ☐ **2B** | ☐ **2L** | ☐ **3T** | ☐ **3Y** | ☐ **4C** | ☐ **1W** |

### Fixture

Cat. No. designates **CC/CCS** fixture and light distribution.

x 17 A x

**Housing:**
- ☐ CC
- ☐ CCS

**Size:**
17 = 17″ Small
60 LEDs

A = Arm Mount

**Distribution:**
- ☐ 1 = Type I Full Cutoff
- ☐ 2 = Type II Full Cutoff
- ☐ 3 = Type III Full Cutoff
- ☐ 4 = Type IV Full Cutoff
- ☐ 5 = Type V Square Full Cutoff
- ☐ L = Type L Left Full Cutoff
- ☐ R = Type R Right Full Cutoff

Light Distribution:

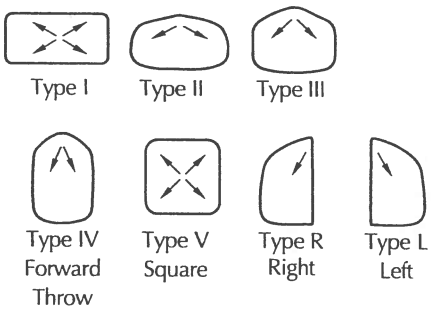


### Electrical Module

**NOTE:** Curvilinear system employs Nichia's SSL product.
Part number: NS6x183
(NS6L183-H3,NS6W183-H3)

Cat. Nos. for Electrical Modules available:

60 xK x

**Source:**
60 = 60 LED's

**Color Temperature:**[1]
- ☐ 4K = 4000K
- ☐ 5K = 5000K
- ☐ 2K = 580nm - Amber

**Voltage:**
- ☐ 120 = 120V
- ☐ 208 = 208V
- ☐ 240 = 240V
- ☐ 277 = 277V
- ☐ 347 = 347V[2]
- ☐ 480 = 480V[2]

[1]3000K is also available on an "Engineered-to-Order" (ETO) basis.
[2]Due to current unavailability of 347V and 480V drivers, specification of these voltages may feature an integral step-down transformer.

### Finish

TGIC powder coat paint over a titanated zirconium conversion coating.

| Color: | Black | Dark Bronze | Light Gray | Stealth Gray™ | Platinum Silver | White | Custom Color[4] |
|---|---|---|---|---|---|---|---|
| Cat. No.: | ☐ **BL** | ☐ **DB** | ☐ **LG** | ☐ **SG** | ☐ **PS** | ☐ **WH** | ☐ **CC** |

[4]Custom colors subject to additional charges, minimum quantities and extended lead times. Consult representative. Custom color description: _____

© 2012 KIM LIGHTING INC. • P.O. BOX 60080, CITY OF INDUSTRY, CA 91716-0080 • TEL: 626/968-5666 • FAX: 626/369-2695

**Type:**
**Job:**
**Catalog number:**

/ / / /

Mtg. Fixture Electrical Module Finish Options

See page 2 See pages 3-4

Select pole from Kim Arms and Poles Selection Guide. If pole is provided by others indicate O.D. for arm fitting.

**Approvals:**

**Date:**



## Specifications

17″ Diameter
60 Light Emitting Diodes
Total System Watts = 66W

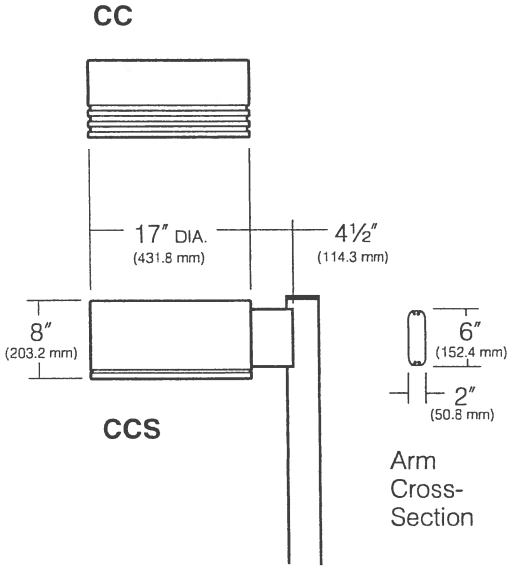


**Housing:** Spun aluminum. (Rollformed linear reveals; **CC:** Three equally spaced reveals, ½″ wide, separated by ½″ ribs, ¼″ deep. **CCS:** One ¼″ groove, ¼″ deep.) Sidewalls have a maximum 1° of taper, and are free of welds or fasteners. A rollformed aluminum flange is hemmed into the bottom providing support for the reflector module. An internal aluminum casting provides for mounting of the electrical module plus reinforcing for side-arm mounting of the fixture.

**Lens Frame Assembly:** One-piece cast aluminum lens frame is attached to the housing by a zinc plated cold rolled steel hinge with a stainless steel pin. Closure is by one self-retained stainless steel screw. A stainless steel self-locking stop arm is provided to hold the lens frame in the open position while servicing. A 3⁄16″ thick clear flat tempered glass lens is fully gasketed by a one-piece extruded and vulcanized silicone gasket. Lens is retained in the frame by removable zinc plated steel clips.

**Standard Arm Mounting:** Arm is one-piece extruded aluminum with internal bolt guides and fully radiussed top and bottom. Luminaire-to-pole attachment is by internal draw bolts, and includes a pole reinforcing plate with wire strain relief. Arm is circular cut to mate with specified round pole.

**Electronic Module:** All electrical components are UL and CSA recognized, mounted on a single plate and factory prewired with quick-disconnect plugs. Module includes a driver, LifeShield™ temperature control device and surge protector. Electrical module attaches to housing with key hole slots, accessible by opening the lens frame and removing optical module.. Driver is rated for -40°F starting and has a 0-10V dimming interface for multi-level illumination options.

**Optical Module:** Precision, replaceable MicroEmitter® reflectors are positioned to achieve directional control toward desired task. The entire EmitterDeck® mounting assembly fastens to the housing as a one-piece module.

**Finish/Color:** Finish is TGIC thermoset polyester powder coat paint, 2.5 mil nominal thickness. Standard colors are Black, Dark Bronze, Light Gray, Stealth Gray™, Platinum Silver, or White. Custom colors are available.

**Warranty:** Kim Lighting warrants Curvilinear LED products ("Product(s)") sold by Kim Lighting to be free from defects in material and workmanship for (i) a period of five (5) years for metal parts, (ii) a period of ten (10) years for exterior housing paint finish(s), (iii) a period of six (6) years for LED Light Engines (MicroEmitter® reflectors) and, (iv) a period of five (5) years for LED power components (LED Driver, LifeShield® temperature control device, surge protector), from the date of sale of such goods to the buyer as specified in Kim Lighting shipment documents for each product.

**CAUTION:** Fixtures must be grounded in accordance with national, state and/or local electrical codes. Failure to do so may result in serious injury.

| Listings and Ratings |
|---|
| ETL[1] to UL Standard 8750 |

[1]Suitable for wet locations.

KIM LIGHTING RESERVES THE RIGHT TO CHANGE SPECIFICATIONS WITHOUT NOTICE.

HUBBELL
HUBBELL LIGHTING, INC

© 2012 KIM LIGHTING INC. • P.O. BOX 60080, CITY OF INDUSTRY, CA 91716-0080 • TEL: 626/968-5666 • FAX: 626/369-2695

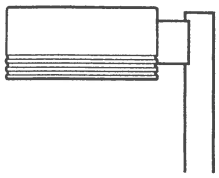

## Standard Features

### Mounting

**3Y** configuration is available for round poles only.

Plan View:

| | | | | | | | Wall Mount |
|---|---|---|---|---|---|---|---|
| EPA: | 1.2 | 2.4 | 2.2 | 3.4 | 3.4 | 3.9 | — |
| Cat. No.: | ☐ **1A** | ☐ **2B** | ☐ **2L** | ☐ **3T** | ☐ **3Y** | ☐ **4C** | ☐ **1W** |

### Fixture

Cat. No. designates **CC/CCS** fixture and light distribution.

CC 21 A x

**Housing:**
CC
CCS

**Size:**
21 = 21″ Large
120 LEDs

A = Arm Mount

**Distribution:**
- ☐ 1 = Type I Full Cutoff
- ☐ 2 = Type II Full Cutoff
- ☐ 3 = Type III Full Cutoff
- ☐ 4 = Type IV Full Cutoff
- ☐ 5 = Type V Square Full Cutoff
- ☐ L = Type L Left Full Cutoff
- ☐ R = Type R Right Full Cutoff

Light Distribution:

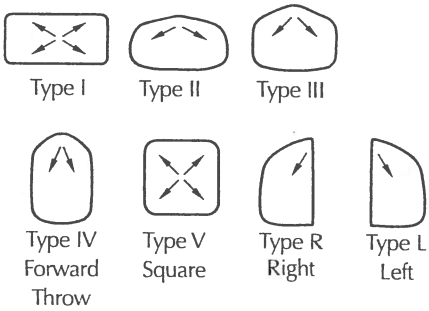


### Electrical Module

**NOTE:** Curvilinear system employs Nichia's SSL product.
Part number: NS6x183 (NS6L183-H3,NS6W183-H3)

Cat. Nos. for Electrical Modules available:

120L xK x

**Source:**
120L = 120 LED's

**Color Temperature:**[1]
- ☐ 4K = 4000K
- ☐ 5K = 5000K
- ☐ 2K = 580nm - Amber

**Voltage:**
- ☐ 120 = 120V
- ☐ 208 = 208V
- ☐ 240 = 240V
- ☐ 277 = 277V
- ☐ 347 = 347V
- ☐ 480 = 480V

[1]3000K is also available on an "Engineered-to-Order" (ETO) basis.

### Finish

TGIC powder coat paint over a titanated zirconium conversion coating.

| Color: | Black | Dark Bronze | Light Gray | Stealth Gray® | Platinum Silver | White | Custom Color[1] |
|---|---|---|---|---|---|---|---|
| Cat. No.: | ☐ **BL** | ☐ **DB** | ☐ **LG** | ☐ **SG** | ☐ **PS** | ☐ **WH** | ☐ **CC** |

[1]Custom colors subject to additional charges, minimum quantities and extended lead times. Consult representative. Custom color description: _____

© 2012 KIM LIGHTING INC. • P.O. BOX 60080, CITY OF INDUSTRY, CA 91716-0080 • TEL: 626/968-5666 • FAX: 626/369-2695

# CC/CCS21

21″ Arm Mounted, Curvilinear, LED

revision 8/27/12 • kim_cc21aled_spec.pdf

**KIM LIGHTING**

**Type:**
**Job:**
**Catalog number:**

/ / / /

Mtg. Fixture Electrical Module Finish Options

See page 2 — See page 2 — See pages 3-4

Select pole from Kim Arms and Poles Selection Guide. If pole is provided by others indicate O.D. for arm fitting.

**Approvals:**

**Date:**



## Specifications

21″ Diameter
120 Light Emitting Diodes
Total Max System Watts = 129W

**CC**

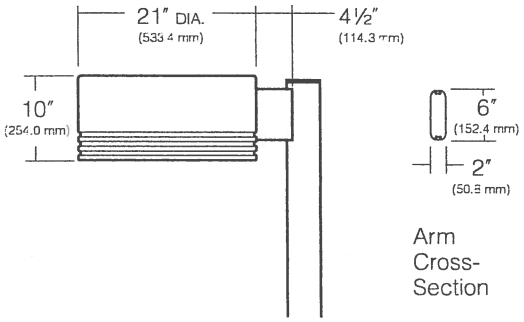


**CCS**

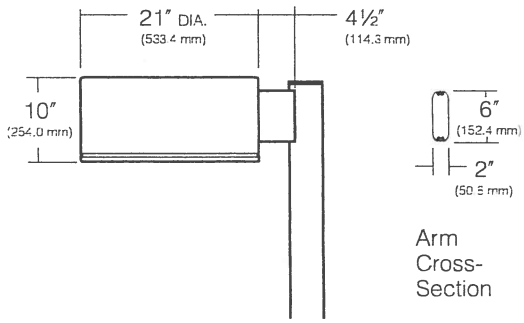


**Housing:** Spun aluminum. (Rollformed linear reveals; **CC:** Three equally spaced reveals, ½″ wide, separated by ½″ ribs, ¼″ deep. **CCS:** One ¼″ groove, ¼″ deep.) Sidewalls have a maximum 1° of taper, and are free of welds or fasteners. A rollformed aluminum flange is hemmed into the bottom providing support for the reflector module. An internal aluminum casting provides for mounting of the electrical module plus reinforcing for side-arm mounting of the fixture.

**Lens Frame Assembly:** One-piece cast aluminum lens frame is attached to the housing by a zinc plated cold rolled steel hinge with a stainless steel pin. Closure is by three self-retained stainless steel screws. A stainless steel self-locking stop arm is provided to hold the lens frame in the open position while servicing. A 3⁄16″ thick clear flat tempered glass lens is fully gasketed by a one-piece extruded and vulcanized silicone gasket. Lens is retained in the frame by removable zinc plated steel clips.

**Standard Arm Mounting:** Arm is one-piece extruded aluminum with internal bolt guides and fully radiussed top and bottom. Luminaire-to-pole attachment is by internal draw bolts, and includes a pole reinforcing plate with wire strain relief. Arm is circular cut to mate with specified round pole.

**Electronic Module:** All electrical components are UL and CSA recognized, mounted on a single plate and factory prewired with quick-disconnect plugs. Module includes a driver, LifeShield™ temperature control device and surge protector. Electrical module attaches to housing with key hole slots, accessible by opening the lens frame and removing optical module. Driver is rated for -40°F starting and has a 0-10V dimming interface for multi-level illumination options.

**Optical Module:** Precision, replaceable MicroEmitter® reflectors are positioned to achieve directional control toward desired task. The entire EmitterDeck® mounting assembly fastens to the housing as a one-piece module.

**Finish/Color:** TGIC thermoset polyester powder coat paint, 2.5 mil nominal thickness. Standard colors are Black, Dark Bronze, Light Gray, Stealth Gray™, Platinum Silver, or White. Custom colors are available.

**Warranty:** Kim Lighting warrants Curvilinear LED products ("Product(s)") sold by Kim Lighting to be free from defects in material and workmanship for (i) a period of five (5) years for metal parts, (ii) a period of ten (10) years for exterior housing paint finish(s), (iii) a period of six (6) years for LED Light Engines (MicroEmitters) and, (iv) a period of five (5) years for LED power components (LED Driver, LifeShield® temperature control device, surge protector), from the date of sale of such goods to the buyer as specified in Kim Lighting shipment documents for each product.

**CAUTION:** Fixtures must be grounded in accordance with national, state and/or local electrical codes. Failute to do so may result in serious personal injury.

| Listings and Ratings |
|---|
| ETL[1] to UL Standard 8750 |

[1]Suitable for wet locations.

KIM LIGHTING RESERVES THE RIGHT TO CHANGE SPECIFICATIONS WITHOUT NOTICE.

HUBBELL
HUBBELL LIGHTING, INC

© 2012 KIM LIGHTING INC. • P.O. BOX 60080, CITY OF INDUSTRY, CA 91716-0080 • TEL: 626/968-5666 • FAX: 626/369-2695

# PRELIMINARY

# STORMWATER MANAGEMENT AND BEST MANAGEMENT PRACTICE NARRATIVE

# FOR

# HARBORCHASE OF LONG GROVE

# LONG GROVE, ILLINOIS

**MAY 2, 2014**

**814.003**

*PREPARED FOR:*

**HARBOR RETIREMENT ASSOCIATES**
**1440 HIGHWAY A1A**
**VERO BEACH, FL 32963**

*PREPARED BY:*

**CEMCON, LTD.**
**2280 WHITE OAK CIRCLE, SUITE 100**
**AURORA, IL 60502-9675**

**630-862-2100**

# PRELIMINARY
# STORMWATER MANAGEMENT AND BEST MANAGEMENT PRACTICE
# NARRATIVE
# FOR
# HARBORCHASE OF LONG GROVE
# LONG GROVE, ILLINOIS

## PROJECT NARRATIVE

On behalf of Harbor Retirement Associates, CEMCON, Ltd. is analyzing the proposed development of an Assisted Living and Memory Care Facility on a 9.7 acre parcel at the northwest corner of Route 53 and Route 83 in Long Grove, IL. The facility would provide approximately 138 units, split between assisted living and memory care units. The existing site is the location of a vacant building (previously a bank) and the associated parking lot and driveway connections. The existing building, parking lot and drives will be removed during the course of the proposed project. The proposed development will consist of a sanitary service extension, watermain and water services, a storm sewer system, a parking lot to service the proposed facility, and a native vegetated bioswale. Access to the site will be off of Old Mill Road at the southwestern corner of the site and also off the existing Fairfield Drive at the north end of the site. The developable area of the site is minimized due to a 100-foot scenic easement along the south and east sides, a forty (40) foot landscape easement along the west side and a 200-foot building setback along the west side.

It is the understanding of the developer that the stormwater management requirements for the site have been accounted for during the development of the areas to the west of the site. Based on the existing site conditions and storm sewer network, this appears to be the case. The site currently drains to an existing stormwater management facility off-site at the northwest corner of the property. The existing drainage pattern will be followed with the proposed development of the site.

The preliminary design of the site proposes that the stormwater runoff from the majority of the impervious area will surface drain into a naturalized bioswale located along the western curb line of the proposed parking lot. Curb openings will be placed in strategic locations to allow flow directly into this swale. The areas of the proposed site that do not directly drain to the swale will be captured in a storm sewer system that will discharge to the swale prior to exiting the site and draining to the off-site stormwater

management facility. The swale will be designed with native plantings at a gentle slope to elongate the travel time and promote filtration and infiltration into the ground. A perforated underdrain system will ensure that adequate drainage of the swale does occur.

It is our opinion that the subject property can be developed in conformance with the municipal and county ordinances. The existing scenic and landscape easements will be disturbed only minimally and the site will utilize an effective best management practice to help promote filtration and enhance the surface water quality before leaving the site.

H:\814003\REPORTS\Prelim SWM Narrative.doc

## HARBORCHASE OF LONG GROVE TRAFFIC NARRATIVE:

The Petitioner, Harbor Retirement Associates (HRA), is proposing a senior living center consisting of fifty-eight (58) Memory Care and eighty (80) units of Assisted Living Care facility with a total of 150 beds. The site is at the intersection of State Routes 53 and 83, with full access points onto Route 83 and Old McHenry Road.

As compared to the anticipated use of Office/Commercial/Institutional for the proposed site, the proposed use as a 138-unit/150-bed assisted living (Alzheimer's/Dementia Care) facility would generate substantially less than the current zoned uses, as the resident's are no longer self-mobile, and can no longer drive a motorized vehicle. HRA provides a community shuttle that transports its residents, their families, and employees for visits, special events, shopping, and other excursions, greatly reducing the number of individual trips made from the site.

HRA anticipates creating ninety (90) new full-time and part-time staff associates and service employees that would be part of HRA's operation to support the 150 new residents. HRA's first preference is to hire local residents from the Long Grove area for these jobs. The three (3) shifts are from 7 AM - 3 PM; 3 PM - 11 PM, and 11 PM - 7AM. Upon full occupancy, it is anticipated that the facility will be staffed with twenty to twenty-two (20 - 22) associates and six to eight (6 - 8) overnight caregivers. There will be a handful of sales and administrative staff that will work from 8 AM – 5 PM, overlapping the caregivers, thus will not materially contribute to the peak traffic demands.

Based upon industry experience, the majority of families and visitors of the residents usually visit after peak commuting hours. They have found that most families typically will come to see their loved ones on the weekends and after work. With this in mind there should be a minimal impact to traffic to Route 53, Route 83, Old McHenry Road, as well as the surrounding roadway network.

As a comparison to the petitioner's existing facilities' experienced traffic patterns, reference ITE's Trip Generation Manual for nursing homes (p. 1172/1173) The average A.M. Peak Hour generates nineteen (19) trips, with thirteen (13) entering and six (6) leaving; the P.M. peak hour traffic is slightly higher with forty-five (45) total trips, eighteen (18) inbound, and twenty-seven (27) outbound.

In conversations with LCDOT, it is the Engineer's understanding that the existing access location to/from Old McHenry Road to remain intact, it must be shown that the proposed use is less intense and generates less traffic that the original proposed use of 78,600 S.F. of office use and it would not be considered a Major Access Permit. Furthermore, if it is not considered a Major Access Permit, it will not be required to convert the existing full access to a right-in/right-out access.

Based upon ITE's Trip Generation Manual (P. 1204/1205), a similar 78,600 S.F. office building would generate 122 total trips, with 107 cars entering the site and fifteen (15) cars leaving the site during the A.M. Peak Hour, and twenty (20) cars entering and ninety-eight (98) cars leaving the site for the P.M. Peak Hour. This compares to an expected maximum of twenty-seven (27) cars either entering or leaving at Peak Hour for the proposed use, thus the expected traffic impact is substantially less (nearly one quarter) than if the property is developed as office use. Therefore, it is the Engineer's opinion that this site should not require a Major Access Permit and instead should remain a full-access location at Old McHenry Road.

As there is a not a similar "use" listed in Section 5-9-4 of the zoning code, the parking code by ordinance is technically five (5) spaces per 1,000 Square feet of building, or 627 Spaces. Based upon our client's experience, one (1) stall for every two (2) employees and one (1) stall for every two (2) units provides forty-five (45) stalls for employees and sixty-nine (69) stalls for resident visitors; this total of 114 spaces is more than adequate to handle even the special events. The current site plan includes 121 stalls plus five (5) handicap-accessible stalls, and thus will require a variance to the Parking Requirement in the zoning code, as there is no identified similar use.

Based upon the information provided above, the proposed use as an Assisted Living/Memory Care Center will not adversely affect the traffic patterns in the area; however, will it require a variance to the parking requirement based upon our client's experience and the ITE traffic counts described above.

H:\814003\REPORTS\05-02-14 HRA LONG GROVE TRAFFIC NARRATIVE.doc

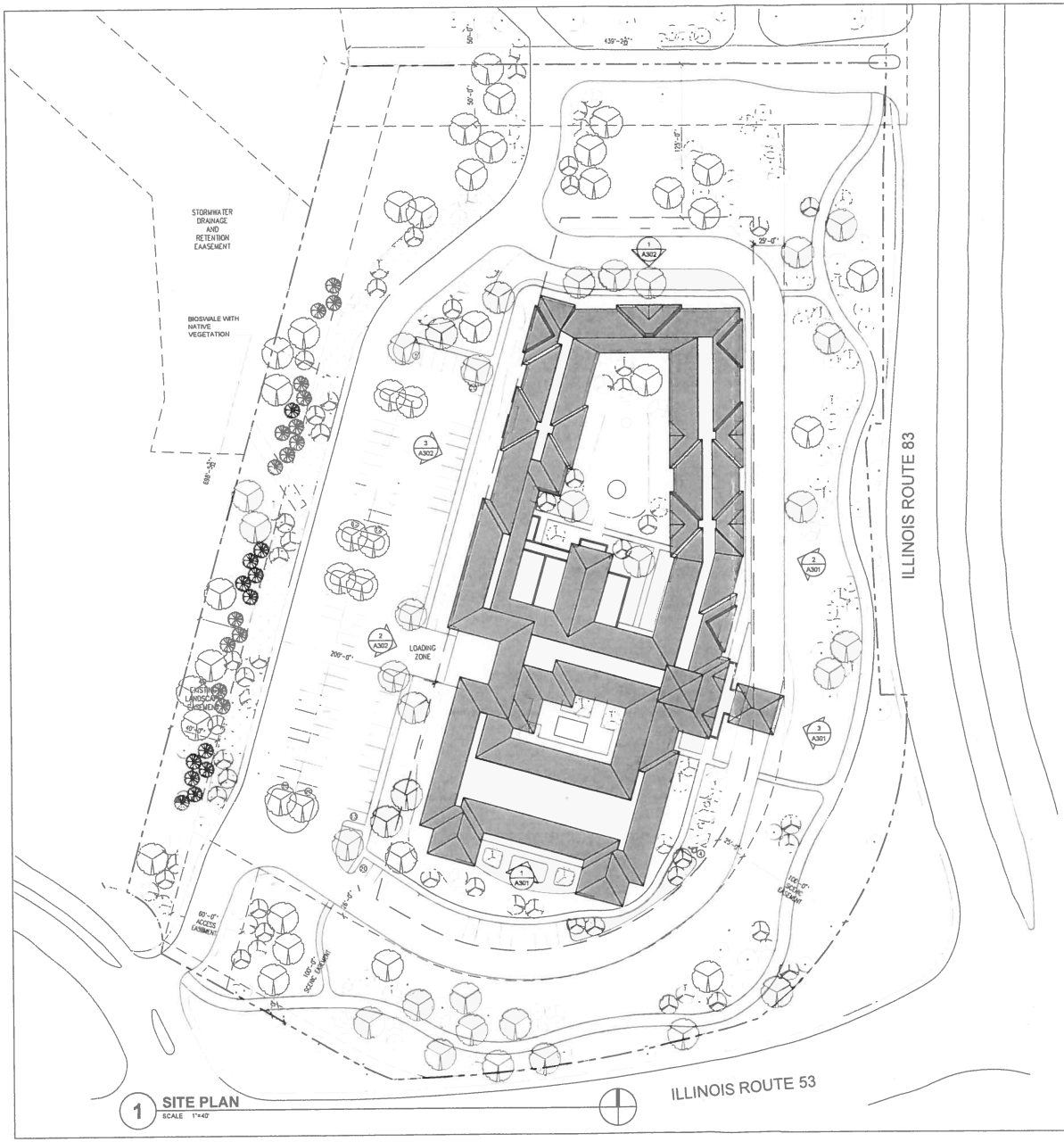


1 SITE PLAN
SCALE 1"=40'

Solomon Cordwell Buenz
www.scb.com
Chicago
312.896.1100
San Francisco
415.216.2450
Architecture Planning Interior Design

| NO. | DATE | DESCRIPTION |
|---|---|---|
| | 05.02.2014 | ISSUE FOR ZONING BOARD APPROVAL |

**HarborChase of Long Grove**
Senior Living Community

Long Grove, Illinois

© 2014 Solomon Cordwell Buenz

# SITE PLAN

Drawn By:
Checked By: PM/PD/PA (edit this)
Project Number: 2013039
Sheet Number: A1.01

3110 Old McHenry Road 60047-9635
Phone: 847-634-9440 Fax: 847-634-9408
www.longgrove.net

# PLAN COMMISSION ZONING BOARD OF APPEALS
# GENERAL ZONING APPLICATION

**1.0 General Information (See Subsection 5-11-8(E) of the Long Grove Zoning Code).**

**1.1 Applicant Name:** Harbor Retirement Associates

Address: 1440 Highway A1A, Vero Beach, FL 32963

Telephone Number: (772) 492-5002 E-mail Address: cjennings@hraonline.net

Fax number: (772) 492-5005

Applicant's Interest in Property: Developer

**1.2 Owner (if different from Applicant).**

Name: Long Grove Associates, LLC

Address: 855 W. Blackhawk St., Suite 105 Chicago, IL 60642

Telephone Number: (312 ) 787-2345 E-mail Address: Martha@bil-mar.com

Fax number: _____

**1.3 Property.**

Address of Property: 1190 Old McHenry Road, Long Grove, IL 60047

Legal Description: Please attach Parcel Index Number(s): 15-30-205-019

Present Zoning Classification R2 PUD_ Size of Property (in acres) 9.729 Ac.

Has any zoning reclassification, variation, or special use permit/PUD been granted for the Property?
Yes: X No: _____

If yes, please identify the ordinance or other document granting such zoning relief: 79-0-38

Describe the nature of the zoning relief granted: Planned Unit Development

Present use of Property:

Residential _____ Commercial X Office _____ Open Space _____ Vacant _____

Other (explain) Currently there is a vacant bank building on site.

Present zoning and land use of surrounding properties within 250' of Property:

| | Zoning Classification | Land Use |
|---|---|---|
| North: | R2 PUD – Long Grove<br>O & R – Long Grove | Office<br>Vacant |
| South: | R9A Special Use – Buffalo Grove | Residential |
| East: | R2 – Long Grove | Vacant |
| West: | R2 PUD – Long Grove | Residential |

**1.4 Trustees Disclosure.**

Is title to the Property in a land trust? Yes_____ No X

If yes, full disclosure of all trustees, beneficiaries and their legal and equitable interests is required. Attach a copy of all documents showing ownership of the Property and the Applicant's and/ or Owner's control of or interest in the Property.

**1.5 Requested Action (Check as many as are applicable).**

_____ Appeal

_____ Variation

_____ Zoning Map Amendment (rezoning)

X Preliminary PUD Plat

_____ Code Interpretation

_____ Special Use Permit (non-PUD)

_____ Zoning Code Text Amendment

_____ Final PUD Plat

**1.6 Supplemental Information (General):****

Every Application filed shall, in addition to the data and information required above, provide the following general information when applicable to the use or development for which approval is being sought:

(a) A description or graphic representation of any development or construction that will occur or any use that will be established or maintained if the requested relief is granted.

(b) A table showing the following, as applicable:

- the total lot area of the lot, in acres and in square feet; and
- the total existing and proposed lot area, expressed in acres, in square feet and as a percent of the total development area, devoted to: residential uses, business uses; office uses; college uses; institutional uses; open space; rights-of-way; streets; and off-street parking and loading areas; and
- the existing and proposed number of dwelling units; and gross and net floor area devoted to residential uses, business uses, office uses, college uses, and institutional uses.

(c) A table listing all bulk, space, and yard requirements; all parking requirements; and all loading requirements applicable to any proposed development or construction and showing the compliance of such proposed development or construction with each such requirement. When any lack of compliance is shown, the reason therefore shall be stated and an explanation of the village's authority, if any, to approve the Application despite such lack of compliance shall be set forth.

(d) The certificate of a registered architect or civil engineer licensed by the State of Illinois, or of an owner-designer, that any proposed use, construction, or development complies with all provisions of this code and other village ordinances or complies with such provisions except in the manner and to the extent specifically set forth in said certificate.

(e) A landscape development plan, including the location, size and species of plant materials.

1.7 **Supplemental Information (per specific request):**

_____ Appeals, Code Interpretations, and Variations: See 5-11-8(E)3, 4, & 5 of the Zoning Code and Form "A"

_____ Special Use Permit (non-PUD): See 5-11-8(E)7 of the Zoning Code and Form "B"

_____ Zoning Map Amendment (rezoning): See 5-11-8(E) 8 of the Zoning Code and Form "C"

_____ Zoning Code Text Amendment: See Form "D"

__X__ Preliminary PUD Plat: See 5-11-18(D)(2) of the Zoning Code and Form "E"

_____ Final PUD Plat: See 5-11-18(D)(3) of the Zoning Code and Form "F"

** The scope and detail of information shall be appropriate to the subject matter of the Application, with special emphasis on those matters likely to be affected or impacted by the approval being sought in the Application. Information required in the application shall be considered the minimum information required for filing an application. Additional information including but not limited to graphic depictions, environmental impacts, plans for sewer and water service and storm water management, photometric plans, traffic studies and effects on property values, among others, should also be considered and may be helpful in detailing the Application.

Special Data Requests. In addition to the data and information required pursuant to this Application, every Applicant/Owner shall submit such other additional data, information, or documentation as the building superintendent or any board or commission before which the Application is pending may deem necessary or appropriate to a full and proper consideration and disposition of the particular Application.

**1.8 Consultants.**

Please provide the name, address, and telephone number of each professional or consultant advising Applicant with respect to this Application, including architects, contractors, engineers or attorneys:

Name: CEMCON, Ltd.
Professional: Land Planning
Address: 2280 White Oak Circle, Suite 100
Aurora, IL 60502
Telephone: (630) 862-2100
E-mail: peterp@cemcon.com

Name: CEMCON, Ltd.
Professional: Civil Engineering
Address: 2280 White Oak Circle, Suite 100
Aurora, IL 60502
Telephone: (630) 862-2100
E-mail: kim.morgart@cemcon.com

Name: SCB Architects
Professional: Architect
Address: 625 N. Michigan Ave., Suite 800
Chicago, IL 60611
Telephone: (312) 896-1100
E-mail: kristy.cubas@scb.com

Name: Daniel Weinbach & Partners, Ltd.
Professional: Landscape Architect
Address: 53 West Jackson Blvd., Suite 250
Chicago, IL 60604
Telephone: (312) 427-2888
E-mail: dweinbach@dwpltd.com

**1.9 Village Officials or Employees.**

Does any official or employee of the Village have an interest, either directly or indirectly, in the Property? Yes: _____ No: X

If yes, please identify the name of such official or employee and the nature and extent of that interest. (Use a separate sheet of paper if necessary.)

**1.10 Successive Applications (5-11-9).**

Second Applications Without New Grounds Barred. Whenever any Application filed pursuant to this code has been finally denied on its merits, a second Application seeking essentially the same relief, whether or not in the same form or on the same theory, shall not be brought unless in the opinion of the officer, board, or commission before which it is brought there is substantial new evidence available or a mistake of law or fact significantly affected the prior denial.

New Grounds to Be Stated. Any such second Application shall include a detailed statement of the grounds justifying consideration of such Application.

Summary Denial With or Without Hearing. Any such second Application may be denied by the building superintendent summarily, and without hearing, on a finding that no grounds appear that warrant a new hearing. In any case where such Application is set for hearing, the owner shall be required to establish grounds warranting reconsideration of the merits of its Application prior to being allowed to offer any evidence on the merits. Unless such grounds are established, the Application may be summarily dismissed for such failure.

Exception. Whether or not new grounds are stated, any such second Application filed more than two years after the final denial of a prior Application shall be heard on the merits as though no prior Application had been filed. The Applicant or Owner shall, however, be required to place in the record all evidence available concerning changes of conditions or new facts that have developed since the denial of the first Application. In the absence of such evidence, it shall be presumed that no new facts exist to support the new petition that did not exist at the time of the denial of the first Application.

**2.0 Required Submittals (See Specific Supplemental Information Form for filing Fees).**

__X__ Fully completed Application with applicable supplementary information

_____ Non-refundable Filing Fee. Amount: $_____

__X__ Planning Filing Fees. Amount: $ 1,100.00

__X__ Minimum Professional Fee/deposit Escrow. Amount $ 5,000.00

**3.0 Certifications.** The Applicant and Owner certify that this Application is filed with the permission and consent of the Owner of the Property and that the person signing this Application is fully authorized to do so.

**3.1** The Applicant certifies that all information contained in this Application is true and correct to the best of Applicant's knowledge.

3.2 The Applicant acknowledges that the Village may seek additional information relating to this Application and agrees to provide the Village with such information in a timely manner. Failure to provide such information may be grounds for denying an Application.

3.3 The Applicant and Owner agree to reimburse the Village for any and all costs relating to the processing of this Application, including any consultants' fees. By signing this Application, Applicant and Owner agree to be jointly and severally liable for such costs, and Owner further agrees to the filing and foreclosure of a lien against the Property for all such costs plus all expenses relating to collection, if such costs are not paid within 30 days after mailing of a demand for payment.

3.4 The Applicant agrees that the Village and its representatives have the right, and are hereby granted permission and a license, to enter upon the Property, and into any structures located there on, for purposes of conducting any inspections that may be necessary in connection with this Application.

3.5 **The Owner, Applicant, and/or designated representative is *required* to be present during the meeting.**

| | |
|---|---|
| Long Grove Associates, LLC | CHARLES N JENNINGS |
| Name of Owner | Name of Applicant |
| Martha L Moran 5-1-14 | 5/1/14 |
| Signature of Owner Date | Signature of Applicant Date |
| Manager | |

**Village of Long Grove**
**Plan Commission Zoning Board of Appeals**
**Supplemental Application Information**
**(Preliminary PUD Plat)**

**FORM "E"**

**In addition to the information required by the General Zoning Application, the Applicant must provide specific supplemental information as required below for Applications for approval of a Preliminary PUD Plat.**

**Applications for Planned Unit Development Preliminary Plat Approval.** In addition to the information required by the General Zoning Application, every Application filed pursuant to Section 5-11-18 of the Zoning Code for approval of a preliminary planned unit development (PUD) plat shall provide at least ten (10) sets of the following plans and documents:

(a) Detailed Plan. A drawing of the planned unit development shall be prepared at a scale of not less than one inch equals one hundred feet (1" = 100') and shall show such designations as proposed streets (public and private), all buildings and their use, common open space, recreation facilities, parking areas, service areas and other facilities to indicate the character of the proposed development. The submission may be composed of one or more sheets and drawings and shall include:

__X__ Boundary Lines. Bearings and distances.

__X__ Easements. Location, width and purpose.

__X__ Streets on and Adjacent to the Tract: Street name, right-of-way width, existing or proposed center line elevations, pavement type, walks, curbs, gutters, culverts, etc.

__X__ Utilities on and Adjacent to the Tract. Location, size and invert elevation of sanitary, storm and combined sewers; location and size of water mains; location of gas lines, fire hydrants, electric and telephone lines and streetlights; direction and distance to and size of nearest water mains and sewers adjacent to the tract showing invert elevation of sewers.

__X__ Ground Elevations on the Tract. For land that slopes less than one-half of one percent (0.5%), show one foot (1') contours, show spot elevations at all breaks in grades, along all drainage channels or swales and at selected points not more than one hundred feet (100') apart in all directions. For land that slopes more than one-half of one percent (0.5%) show two foot (2') contours.

_____ Subsurface Conditions on the Tract, if Required by the Plan Commission. Location and results of tests made to ascertain subsurface soil, rock and ground water conditions; depth to ground water unless test pits are dry at a depth of five feet (5'); location and results of soil percolation tests if individual sewage disposal systems are proposed.

__X__ Other Conditions on the Tract. Watercourses, flood plains, marshes, rock outcrop, wooded areas, isolated preservable trees one foot (1') or more in diameter, houses, barns, accessory buildings and other significant features.

__X__ Other Conditions on Adjacent Land. Approximate direction and gradient of ground slope, including any embankments or retaining walls; character and location of buildings, railroads, power lines, towers and other nearby nonresidential land uses or adverse influences; owners of adjacent platted land; for the adjacent platted land refer to subdivision plat by name, recording date and number and show approximate percent built up, typical lot size and dwelling type.

__X__ Zoning on and Adjacent to the Tract. Zoning on and adjacent to the tract.

_____ Proposed Public Improvements. Highways or other major improvements planned by public authorities for future construction on or near the tract.

_____ Open Space. All lots intended to be dedicated for public use or reserved for the use of all lot owners with the purpose indicated.

__X__ General Location, Purpose and Height. General location, purpose and height, in feet and stories, of each building other than detached single family dwellings on individually platted lots.

__X__ Map Data. Name of development, north point and scale, date of preparation and acreage of site.

__X__ Water Facilities. The preliminary plat shall have depicted on its face all lakes, ponds, detention sites, retention sites and dams. This includes existing lakes, ponds, detention sites, retention sites and dams or proposed lakes, ponds, detention sites, retention sites or dams. If the water facility is proposed, the preliminary plat shall be accompanied by preliminary engineering plans, including the depth, capacity and relation of the water facility to proposed storm drain facilities.

__X__ Miscellaneous. Such additional information as may be required by the plan commission.

__X__ Character. Explanation of the character of the planned development and the manner in which it has been planned to take advantage of the flexibility of these regulations.

___X__ Ownership. Statement of present and proposed ownership of all land within the project, including present tract designation according to official records in offices of the County Recorder.

___X__ Names. The names and addresses of the persons to whom the notice of the hearing to be held by the planning agency are to be sent shall be provided by the subdivider by affidavit and shall include all owners of lots situated within two hundred fifty feet (250') of the lot for which plat approval is sought.

(b) Schedule. Development schedule indicating:

__N/A__ Stages in which project will be built with emphasis on area, density, use and public facilities such as open space to be developed with each stage. Overall design of each stage shall be shown on the plat and through supporting graphic material.

__N/A__ Approximate dates for beginning and completion of each stage.

__N/A__ If different land use types are to be included within the planned unit development, the schedule must include the mix of uses to be built in each stage.

(c) Covenants. Proposed agreements, provisions or covenants which will govern the use, maintenance, and continued protection of the planned development and any of its common open space.

(d) Density. Provide information on the density of residential uses and the number of dwelling units by type.

(e) Nonresidential Uses. Provide information on the type and amount of ancillary and nonresidential uses in a residential development.

(f) Service Facilities. Provide information on all service facilities and off-street parking facilities.

(g) Architectural Plans. Preliminary architectural plans for all primary buildings shall be submitted in sufficient detail to permit an understanding of the style of the development, the design of the building and the number, size and type of dwelling units.

(h) Facilities Plans. Preliminary plans for:

__N/A__ Roads including classification, width or right of way, width of pavement and typical construction details.

___X__ Sanitary sewers.

___X__ Storm drainage.

___X__ Water supply system.

___X__ Lighting program.

(l) Traffic Mitigation.

___X___ All new developments of one hundred (100) or more dwelling units, or, in the case of nonresidential development, one which will have one hundred (100) or more occupants, shall be required to provide a traffic study, prepared by a qualified traffic engineer, to establish trips generated, necessary road and other improvements, and other reasonably necessary information relating to traffic impact of the development on village, county or state roads.

__N/A_ All developments which will have one hundred (100) or more occupants shall be required to provide an employee traffic mitigation plan. The plan will establish specific actions by the owner to limit peak hour vehicular traffic generated by the development. These actions might include staggered work hours, ride sharing, van pools, ride share or transit promotion, transit stop or van service to rail stops, full service cafeteria, or preferential parking plan.

**Fee Schedule for Planned Unit Development Applications:**

| | |
|---|---|
| 1. Application fee | 100.00 |
| 2. Planning fee | 1,000.00 |
| 3. Professional fee escrow minimum deposit, which may be greater as determined by the village manager commensurate with scope of project | 5,000.00 |

**** PROFESSIONAL FEE ESCROWS MUST BE MAINTAINED AT THE MINIMUM $5000.00 LEVEL.**